D.S. CAT. No.
3040-021698

UN CONTROLLED COPY
CERTIFIED CORRECT COPY OF APPROVED
DRAWINGS AT THIS DATE 21/9/23
DESIGN & DRAWING OFFICE,
ORDNANCE FACTORY, TIRUCHIRAPPALI -620 016.

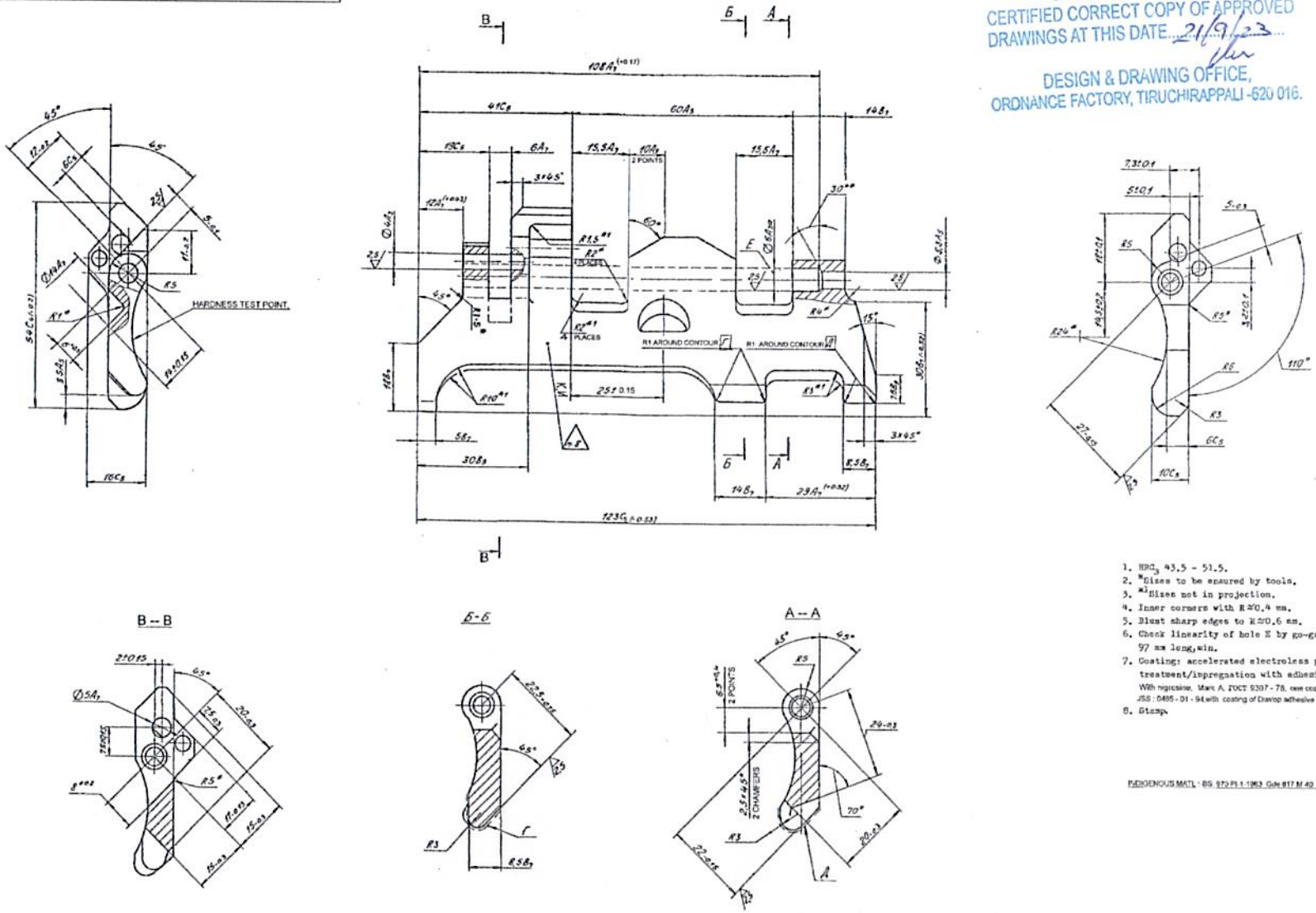

1. HRC$_3$ 43.5 - 51.5.
2. *Sizes to be ensured by tools.
3. *1Sizes not in projection.
4. Inner corners with R ≅ 0.4 mm.
5. Blunt sharp edges to R ≅ 0.6 mm.
6. Check linearity of hole E by go-gauge Ø5.95$_{-0.01}$, 97 mm long, min.
7. Coating: accelerated electroless phosphating with chromate treatment/impregnation with adhesive ВФ-4, ГОСТ 12172-74. With nigrosine, Mark A, ГОСТ 9307-78, one coat OR Phosphating (accelerated) lide I to JSS: 0485-01-94 with coating of Dunlop adhesive S 758 one layer & nidrosine to JSS: 1036.
8. Stamp.

INDIGENOUS MATL: BS 970 Pt.1-1983 Gde 817 M 40 "Z" CONDITION

75.09	19157-W		D.S. CAT. No. ADDED & NOMEN. AMENDED.			DRAWN -	CHD -	ASSY DRG -
28-8-96			SCANNED & PRINTED WITHOUT CHANGE			SCANNED: SKB	CHD - SKB	DATE -
DATE	AUTHORITY	ZONE	AMENDMENTS	SIG. AHSP	SIG. DD	CS/MAN	DD	AHSP FOR CQA(W)
						MATERIAL - STEEL 30 x PA. OCT 3-90-83		SCALE - 2 : 1
								ESTD mass - 0.135

PREV DG Nos - 16407-W, 16857-W, 18174-W, 18193-W, 18283-W, 18291-W, 18614-W & 18845-W Dt. 13-01-04

DRG SEALED - 18174-W Dt. 22-09-95

DD CQA(W)

PROTECTIVE FINISH -

PAWL पॉवल

CQA(W), JABALPUR

DESIGN No.

PART No. 2A42.05.096

DS CAT No. 3040-021698