765-78-837

▽3 Unless stated otherwise.

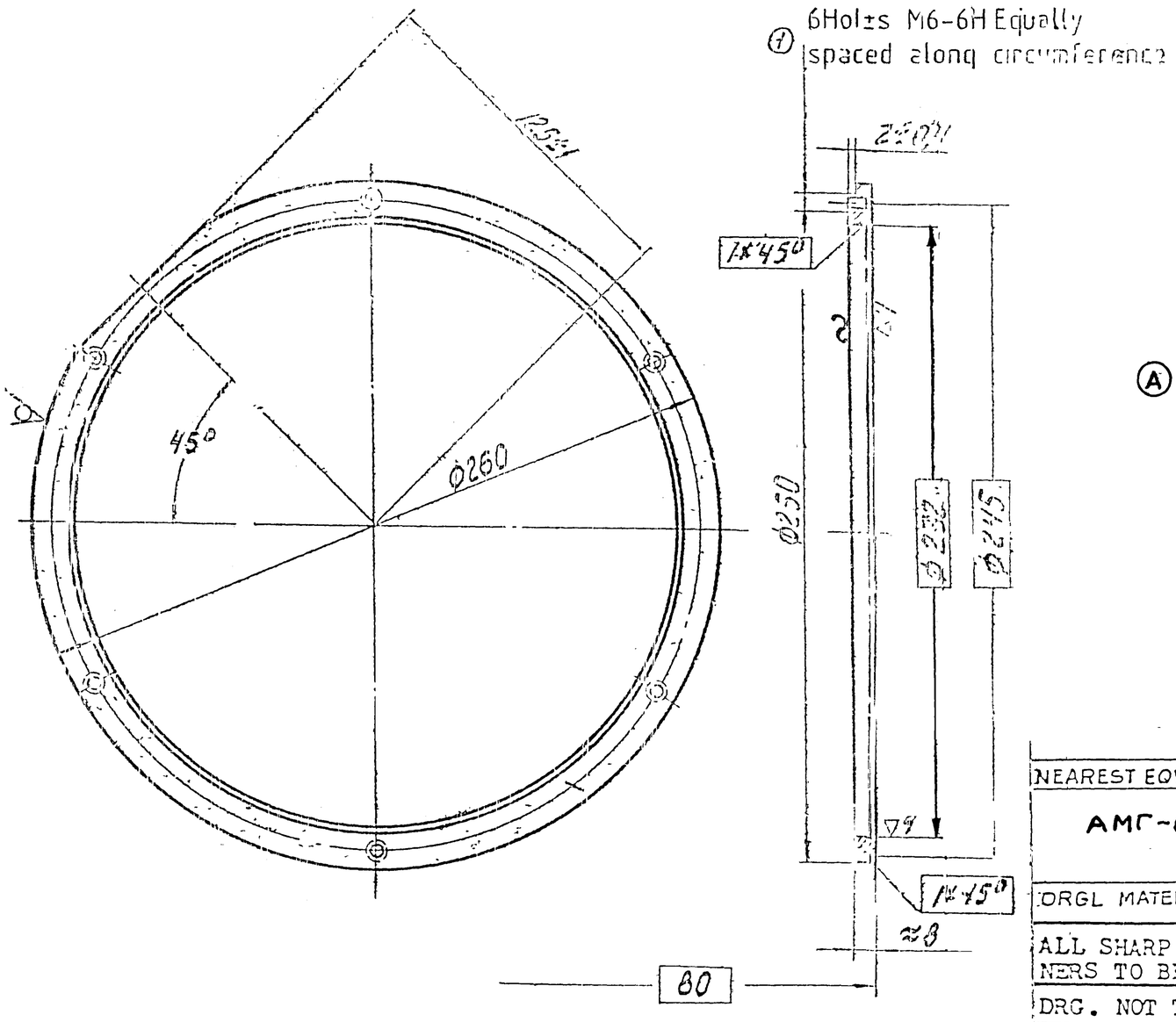

1) Blunt sharp edges

2) Provide dimensions without deviations as per accuracy class 7, OST1010

3) Machine as per dimensions given in ▭ in assembly

4) Alternate material is AMГ5 GOST 4784-74

5) Stamping draft not exceeding 0.5mm is allowed

Ⓐ EQ MAT: GR. 54300 TO IS:734-75

NEAREST EQVT MATERIAL			
AMГ-6 GOST 4784-74	00960-ICY 11-9-03	Ⓐ	EQ. MATERIAL ADDED
ORGL MATERIAL	DC(I)No & DATE	ISSUE	AMENDMENTS
ALL SHARP EDGES & CORNERS TO BE ROUNDED OFF.	ALL THREADS TO CONFORM TO SPECIFICATION.		STAMP OR ETCH, PART NO. MANUFACTURER'S NAME & YEAR OF MFR.
DRG. NOT TO BE SCALED			
SCALE:- 1:2	TOLERANCE ON DIMENSIONS UNLESS OTHERWISE SPECIFIED.		USED ON:- 765-78-СБ383
DATE :- 22-09-97			
DRN.	WT :-(Kg)	FLANGE	
TCD.	0.156		
CHD.		DRAWING NO 765-78-837	PART NO
APD.			

CONTROLLERATE OF QUALITY ASSURANCE (INFANTRY COMBAT VEHICLES)

Подп. и дата | Инв. № дубл. | Взам. инв. № | Подп. и дата | Инв. № подл. 96-14286