DRG.No.	IC	SS	S	AA	A	C	SST
	0204	03	02	02	18	017	00DB

GEN TOL FINE/MEDIUM/COARSE
CLASS TO IS:2102

DRG CONVENTIONS CONFIRM TO INDIAN STD
DIMN IN mm UNLESS OTHERWISE STATED

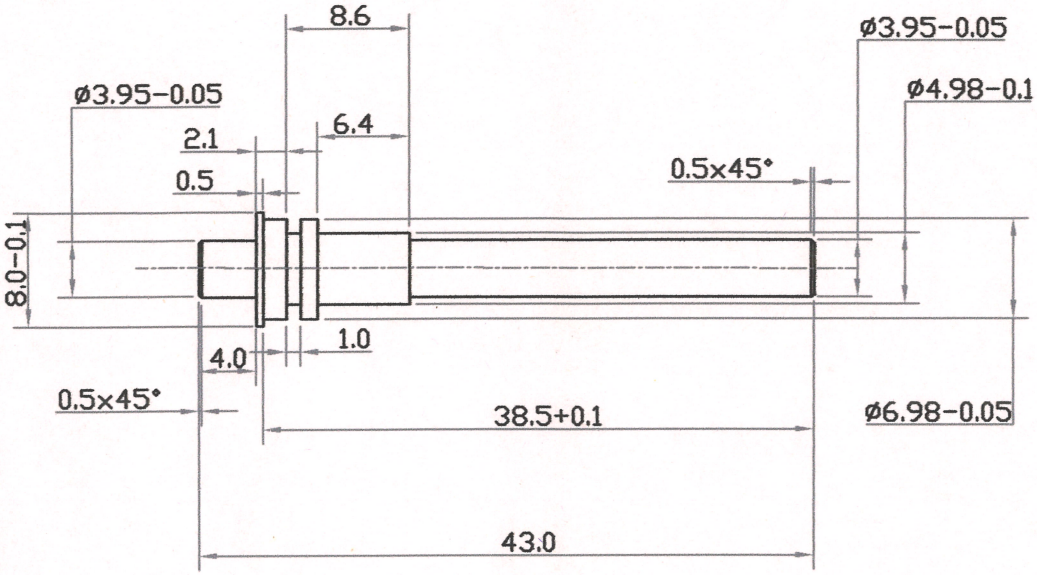

NOTES: 1) REMOVE ALL SHARP EDGES AND BURRS
2) HEAT TREATMENT : HARDENED TO 500–550 HV
WITH CASE DEPTH 0.13 TO 0.26

S No	DATE	AUTHORITY	BRIEF RECORD	ZONE	CD	GO
1	10-4-14	M-22	DIMN.ø3.95-0.05 WAS ø4.0-0.05	B-1,2		

SIGN

DRN SD
CHD
APPD
DATE 10/04/2014 For Director
SEALED
DATE

MATERIAL:
STEEL TO IS:4432 1988, Gr 13Ni13Cr3 (En-36B)

PROTECTIVE FINISH: PHOSPHATED TO SPECN
IS:3618-1966, CLASS 'B'

SCALE 2:1
EST MASS

TITLE

PIN AUTO SEAR

DESIGN AUTHORITY
ARDE
PUNE 411021

DRG.No.	IC	SS	S	AA	A	C	SST
	0204	03	02	02	18	017	00DB

PART No
DS CAT No
AHSP