FORGING DRAWING

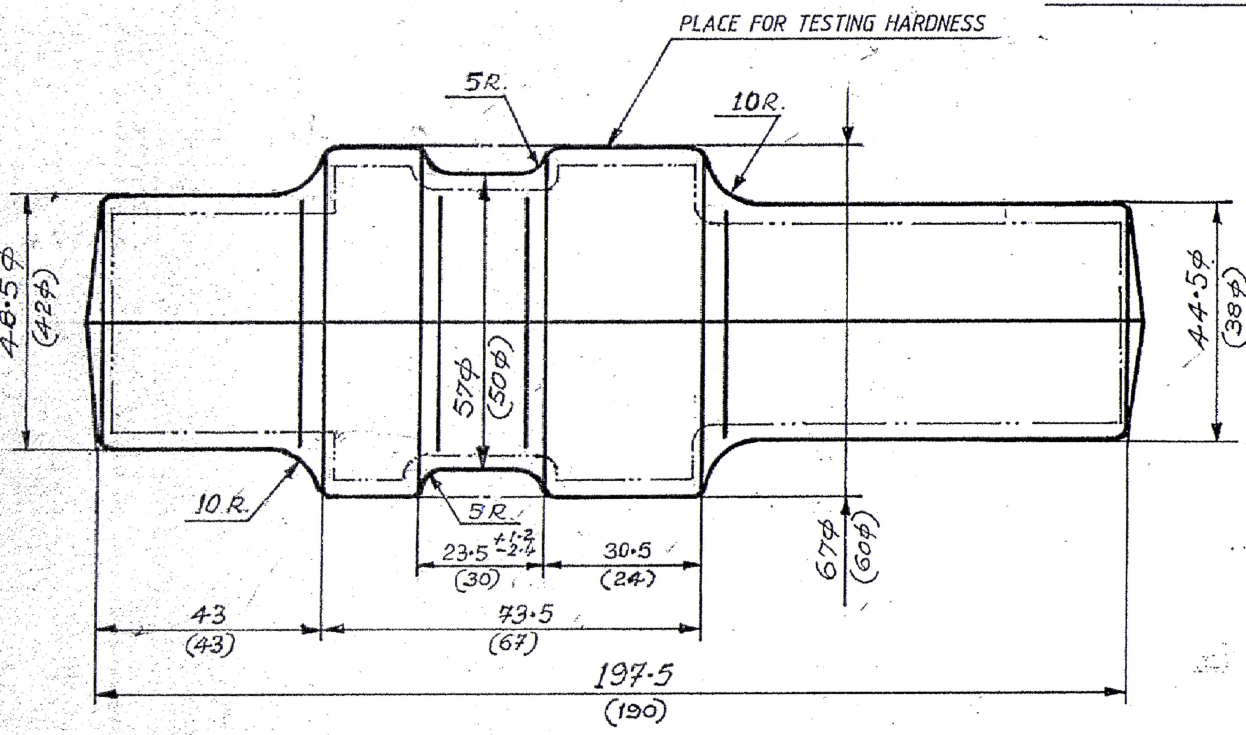

C	0.27-0.34	Si	0.17-0.37
Mn	0.3-0.6	Cr	0.6-0.9
Ni	2.0-2.4	Mo	0.2 -0.3
V	0.10-0.18	P	0.025 MAX.
S	0.025 MAX.	Cu	0.3 MAX.

(6)

HEAT-TREATMENT PROCESS CHART

NOMENCLATURE AND IDT. NO:	STEEL GRADE	TYPE OF OPERATION	EQUIPMENT	TEMP. IN°C	TIME	COOLING MEDIUM	FIXTURE	HARDNESS INSPN. %
GAS CYLINDER C 2035	30XH2MφA	NORMALIZING HEATING	ELECTRIC CHAMBER FURNACE	850-870	4 HRS.	AIR	ON TRAY	3%, BUT NOT LESS THAN 3 PIECES.
		HIGH TEMPERING HEATING	ELECTRIC CHAMBER FURNACE OR ELECTRIC SHAFT FURNACE	660-680	5 HRS.	WITH FURNACE UPTO 500°C AND IN AIR	ON TRAY	

1. DRESSING OF PLACES FOR CHECKING HARDESS
2. HARDNESS CHECKING

UN CONTROLLED COPY
CERTIFIED CORRECT COPY OF APPROVED DRAWINGS AT THIS DATE 06/2/24
DESIGN & DRAWING OFFICE,
ORDNANCE FACTORY, TIRUCHIRAPPALI -620 016.

1. DIMENSIONS ARE IN mm.
2. HEAT-TREATMENT NOMALIZATION AND HIGH TEMPERING HARDNESS HB 255 MAX.
3. DE-SCALING :- PICKLING
4. DISPLACEMENT IN PARTING LINE SHOULD NOT BE MORE THAN 0.7 mm
5. REMAINDER FLASH ALONG DIE-PARTING LINE SHOULD NOT EXCEED 1.0 mm
6. SCALE :- 1:1
7. CURVATURE OF ROD SHOULD NOT EXCEED 1.0 mm
8. FIRST ANGLE PROJECTION
9. SURFACE DEFECTS SHOULD NOT EXCEED 0.9 mm DEPTH.
10. UN-SPECIFIED DRAFT ANGLE 7°
11. UN-SPECIFIED RADII 2.5mm
12. ALLOWANCES ARE AS PER II CLASS GOST 7505-74 M2
13. TOLERANCES ARE AS PER II CLASS GOST 7505-74 C2 AND AS FOLLOWS
    VERTICAL $^{+1.9}_{-1.0}$
    HORIZONTAL $^{+2.4}_{-1.2}$
    DIE FORGING BY HAMMER
14. NUMBER OF PARTS OBTAINED FROM ONE DIE FORGING : 1 PIECE
15. DIMENSIONS BETWEEN BRACKETS ARE FOR MACHINING
16. STAMP CONVENTIONAL STAMP OF BLACKSMITH, MO 5 GOST 2930-62
17. MATERIAL :-30XH2MφA-a OST 3-98-80 (D)
18. RAW MATERIAL SIZE :- 60φ $^{+0.5}_{-1.1}$ x 230±2 LONG (HOT ROLLED)
19. WEIGHT OF THE FORGING 3.640 Kgs.

INDIGENOUS MATL. :- STEEL GRADE 826 M31 CONDITION 'Z' S&P (6)
CONTENT 0.025% EACH MAX. TO BS:970 Pt-1-1983. (7) OR
40 Ni 2Cr1 Mo28 TO IS: 4367-67 HARDENED TO ACHIEVE
THE HARDNESS 41·5 TO 46·5 HRC OR (5)
STEEL GRADE 817 M40 CONDITION 'Z' S&P CONTENT
0.025% EACH MAX TO BS:970 ~~Pt-1-1983~~ Pt-3-1991 (6)

VETTED FOR MATERIAL ONLY
AS PER LAST DC (I) No. 18291 W
DT 3.9.96
(MR. YADADISH)
Sr. Scientific Officer
Sr. Quality Assurance Dept (Armts)
Tiruchirapalli-620016.

(7) D DA.No.006/16 Dt.26.05.16 (PP)

SL. NO	AMENDMENTS	SIG & DATE
(6)	DA-No. 006/98 Dt. 24-4-98	24/4/98
(5) up-dated	DA-No. 22/97 Dt. 23-3-97	25/3/97
C (4)	DA.NO. 145/94. Dt 19-11-94	
(3)	ALT. MATL. CONDITION 'Y' CHANGED TO 'Z'	
(2)	ALT. MATL. ADDED.	
(1)	STORE DRG. NO ADDED	25/3/92

FOR COMPONENT NO (1)
2A42-02-035-GAS CYLINDER

REDRAWN	CHECKED	APPROVED	I/C. PROJ	WM/PROJ.
Sadhi 13/05/69	H Sethuraman	6/'88		10/6/88

ORDNANCE FACTORY
TIRUCHIRAPALLI-16

DRG NO: 64 C 2035 200 D 3

ALB. NO. 363/40