DRAWING NUMBER
520.02.002

SHEET No. 1 OF 1

Rz80/ (√)

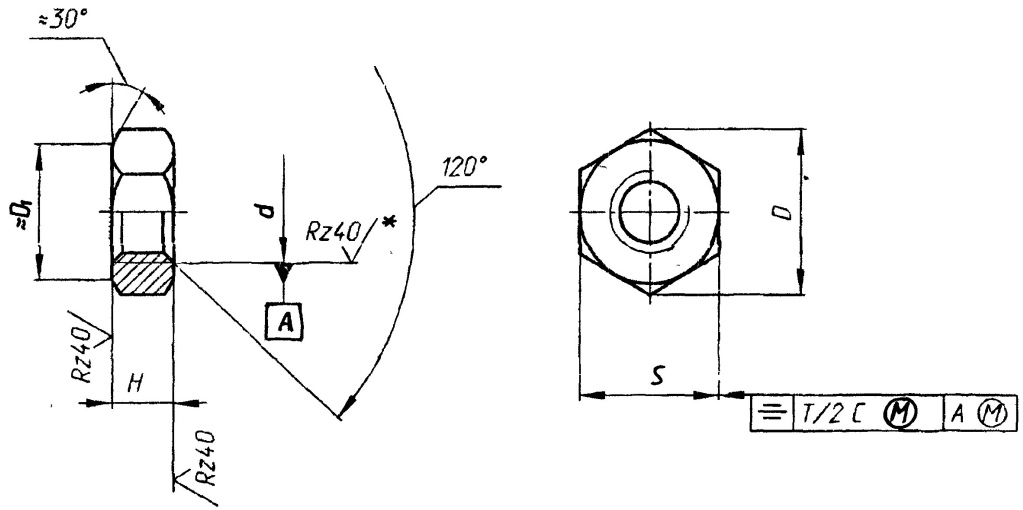

1. Alternate material Steel 15, 40 GOST 1050-88 and 20nc GOST 10702-78.
2. * Surface finish is to be ensured by tool.
3. Coating Zn 6 Chromotizing.
4. Other requirements should be as per GOST 1759.0-87 and 520.TY1.

Обозначение DESIGNATION	d	D1, мм	S, мм NOMINAL номин	S, мм LIMIT DEVIATION пред отк	H, мм NOMINAL номин	H, мм LIMIT DEVIATION пред отк	D, мм NOMINAL номин	D, мм LIMIT DEVIATION пред отк	C, мм	WEIGHT Масса, кг	USED ON
520 02 002	M10x1-6H	16,2	17	-0,43	8	-0,9	19,6	-0,8	0,45	0,0116	172 15 002 Cb-5b-Cb, 176 93 013 Cb & 014Cb, 176 83 027Cb, 188 31Cb-6cb 172 15 015Cb-4, 172 83 079cb, 176 31 cb, 172 93 001Cb-5cb. PV572.0711.0051 (6A)
-01	M10x1-6H	16,2	17		6	-0,75	19,6		0,45	0,0087	172 98 001cb -2A, 188-15-027Cb cb, 188 61 001 Cb cb. PV572.0718.0143 (6A)
-02	M24x1,5-6H	34,2	36	-1,0	20	-1,3	41,6	-1,3	0,70	0,110	172 98 001cb, 176 95 002cb-1.
-03	M24x1,5-6H	34,2	36		10	-0,9	41,6		0,70	0,058	
-04	M27x1,5-6H	39	41		12	-1,1	47,3		0,70	0,090	
-05	M10x1-6H	13,3	14	-0,24	8	-0,58	15,2	-0,7	0,4	0,0066	
-06	M12-6H	16,2	17	-0,43	7	-0,75	19,6	-0,8	0,43	0,012	

(6B) EQLT.MATL: Grade:070M20 to BS:970/83, Pt-I.

DRG. INDIANISED BASED ON RUSSIAN ORIGINAL ISSUE - 6
COMMON TO T-72 & BLT

356

SUPPLY CODE
U-01-1-1
D90033

F - 33
12

SIZE A3

PILOT SAMPLE SHOULD BE APPROVED BY A H S P BEFORE BULK PRODUCTION.

EST. WT. (Kg) SEE TABLE

TO BE STAMPED OR MARKED WHERE INDICATED THUS # (LETTERS)

ALL SHARP EDGES AND CORNERS TO BE REMOVED UNLESS OTHERWISE STATED MACHINED CORNERS TO HAVE R OUTSIDE R INSIDE EQUIVALENT CHAMFERS ARE PERMISSIBLE.

ISSUE	DATE	NATURE OF AMENDMENTS
6B	08.8.16	83201/TECH.GEN/ALT.MATL/IND-I, Dt:11.5.16
6A	26.11.12	55150/CQA(HV)/DB/BLT T-72 Dt. 19.07.11

DRN	Chushparaj
CHD	B. Tom
APPD	Chauchel
DATE	13 02 04
SCALE:	–
DIMENSIONS IN mm	
TOLERANCE ON DIMNS UNLESS OTHERWISE STATED IS : 2102 - 69	
ALL THREADS TO CONFORM TO	

MATERIAL :- STEEL 20 GOST 1050-88

USED ON :- SEE TABLE.

CONTROLLERATE OF QUALITY ASSURANCE (HEAVY VEHICLES) AVADI

TITLE :- NUT

D S CAT NUMBER

DRAWING NUMBER 520.02.002