DRG No	IC	SS	S	AA	A	C	SST
	8603	02	01	00	00	021	12XA

GEN TON : MEDIUM CLASS TO IS : 2102

DRG CONVENTIONS CONFORM TO INDIAN STD.
DIM IN mm UNLESS OTHERWISE STATED

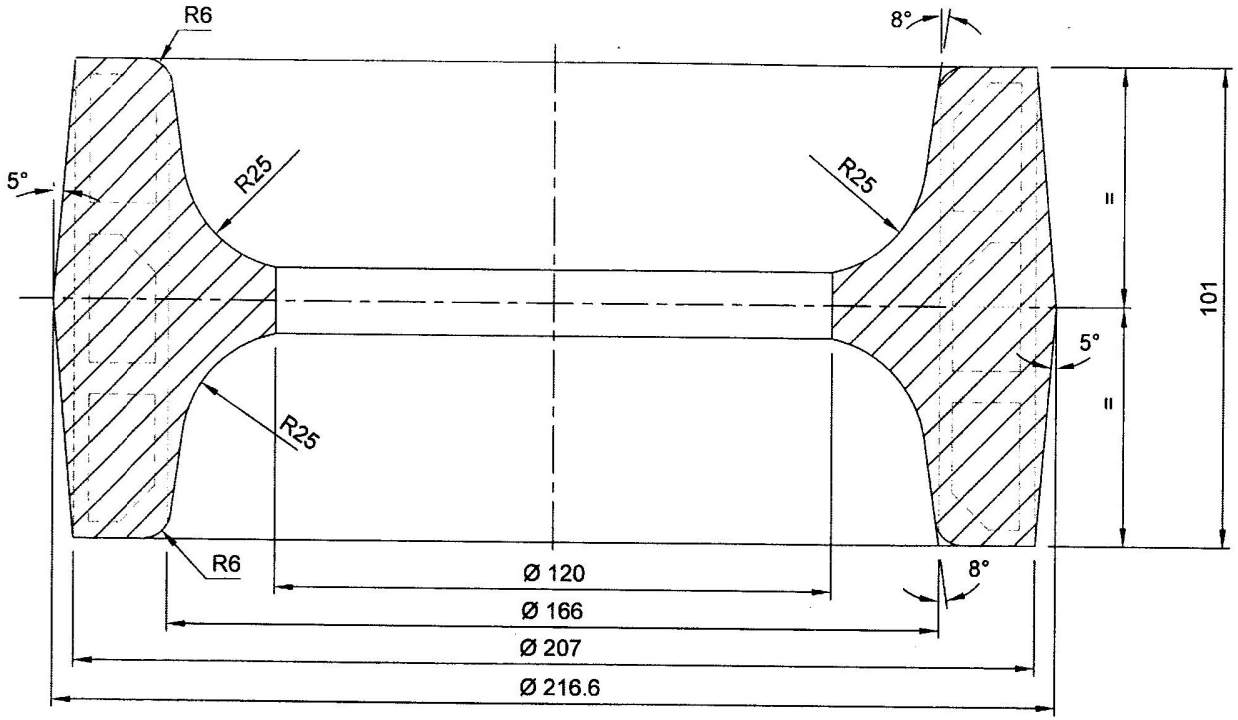

V S KARKHANIS
Jr. Tech Officer
Dy Asstt. Controller
4 SEP 2015

NOTE :

1. FORGING DRAWING FOR GUIDELINE ONLY.
2. THREE RINGS CAN BE MANUFACTURED FROM FORGING.
3. FOR QA & QC REFER SPECIFICATION NO. ARDE / SPECN / PINAKA / RKT- 03 & 13

R No	DATE	AUTHORITY	BRIEF RECORD	ZONE	CD	GO
					SIGN	

DRN P K SINGH	CHD SOP	MATERIAL : STEEL TO IS: 5517-1993, 40Ni6Cr4Mo3
APPD DATE 26 3 15	SRS FOR DIRECTOR	PROTECTIVE FINISH
SEALED DATE		NEXT OPERATION DRG. No. 8603 02 01 00 00 021 22XA
SCALE - 1:1	EST MASS	TITLE FORGING FOR RING (FOR 3 RINGS)
DESIGN AUTHORITY ARDE		

DRG No	8603 (IC)	02 (SS)	01 (S)	00 (AA)	00 (A)	021 (C)	12XA (SST)

PART No | DS CAT No | AHSP