CONTROL No.4269.Dt.11MAR2021 FOR EFA

3304-08-9

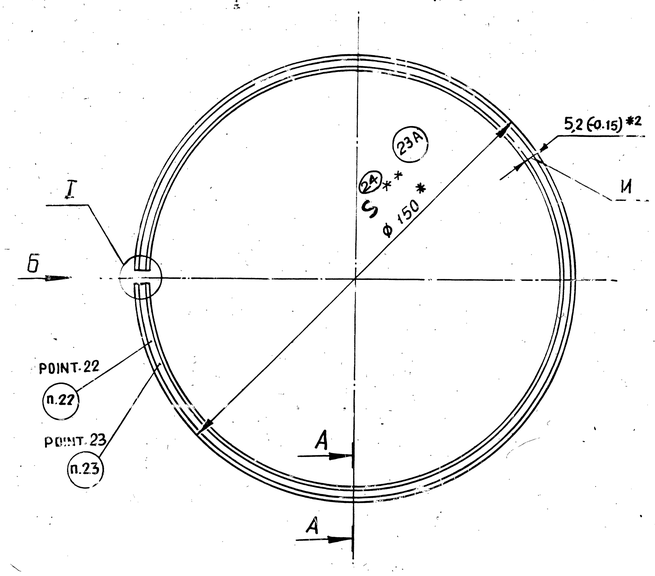


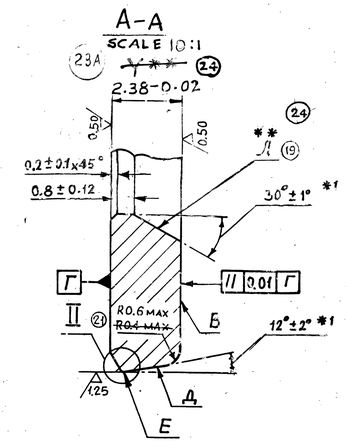


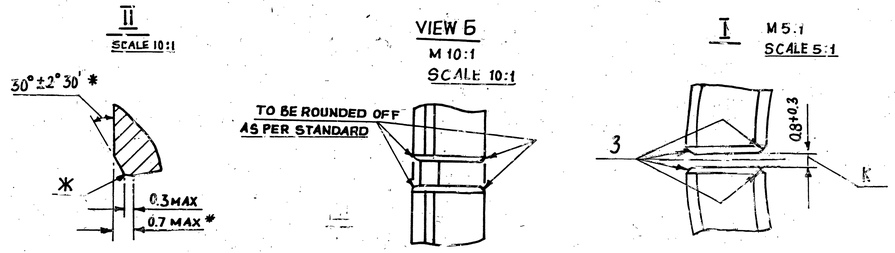


23A * * REPAIR SIZE DIMENSIONS

24

| DRAWING No. | X | Y |
|---|---|---|
| 3304 - 08-9 R1 | DIA 150 | $2.68^{-0.02}$ |
| 3304 - 08-9 R2 | DIA 150.2 | $2.38^{-0.02}$ |
| 3304 - 08-9 R3 | DIA 150.2 | $2.68^{-0.02}$ |

24 * * REPAIR SIZE DIMENSION

| CATEGORY | DIMENSION 'S' |
|---|---|
| 3304-08-09-R1 | 150.10 |
| 3304-08-09-R2 | 150.20 |

## EXPLANATORY NOTE :-

28. MATERIAL QUOTED : WIRE 3.1x7.5 TY 14-4-229-72

SQUARE GAUGE STEEL WIRE, WITH SIDES 3.1mm AND 7.5mm.

WIRE MATERIAL :- GRADE 65 G AS PER GOST 1050-74.

a) CHEMICAL COMPOSITION :- AS PER GOST 1050-74.

| GRADE | CONTENT OF ELEMENTS % | | | | | | | | |
|---|---|---|---|---|---|---|---|---|---|
| | C | Si | Mn | Cr | Ni | Cu | S | P |
| 65 G | 0.62-0.70 | 0.17-0.37 | 0.90-1.20 | MAX 0.25 | MAX 0.25 | MAX 0.25 | MAX 0.040 | MAX 0.035 |

b) MECHANICAL PROPERTIES :-

ULTIMATE TENSILE STRENGTH 90 - 120 Kgf/mm²

NUMBER OF BENDS 3 (min) WHILE TESTING ON ROLLERS WITH A DIAMETER OF 20mm.

23A * * 27A. CHECK SIZE 'K' USING THE FOLLOWING SIZED WASHERS:

24 - WITH A DIAMETER OF $150.10^{+0.03}$ mm FOR RING 3304-08-9R1 :-

- WITH A DIAMETER OF $150.20^{+0.03}$ mm FOR RINGS 3304-08-9 R2, ~~R3~~ 24

* * 27B. MARKS R1, R2, ~~R3~~ 24 TO BE APPLIED WITH RESPECT TO THE REPAIR

24 SIZE CATAGORY USING SOLUTION NO.5 PREPARED ACCORDING TO ИЛ-16-73. LETTERING ПО-5, GOST 2930-62.

## TECHNICAL REQUIREMENTS - TRANSLATED

1. INSPECTION GROUP IV AS PER ГТ-41.
2. HRC$_3$ 21 TO 29 WITH HRC$_3$ ≤ 22 MEASUREMENTS ARE TO BE TAKEN ON SCALE B. IN THIS CASE HRB ≥ 96.
3. REQUIREMENTS FOR BLANK AS PER TY 14-4-229-72.
4. VARIATION IN WIDTH OF DIMENSION 'U' SHOULD NOT EXCEED 0.1 mm.
5. ROUGHNESS OF SURFACE 'E' AFTER CHROMIUM MOLYBDENUM COATING IS 0.32
6. CRACKS, ROUGH SPOTS, DENTS AND METALLURGICAL DEFECTS ARE NOT PERMISSIBLE ON THE SURFACE OF SLINGER.
7. COATING OF SURFACE 'A' AND 'E' Cr.Mo AS THICK AS 60-120 MICRONS. AS PER ИЛ-212-76 COATING IS TO BE APPLIED (WITH SLINGER) IN COMPRESSED STATE.
8. TO BE COATED WITH 01 AFTER CHROMIUM MOLYBDENUM ALLOY COATING IS APPLIED AS PER ИЛ-570-84.
9. HV 550 TO 600 FOR SURFACES 'A' AND 'E' AFTER CHROMIUM MOLYBDENUM ALLOY COATING, TO BE CHECKED AS PER ИЛ-212-76.
10. THE DEVIATION IN TOTAL THICKNESS OF CHROMIUM MOLYBDENUM ALLOY FOR ONE SLINGER SHOULD NOT EXCEED 0.04mm
11. CHIPPING OF CHROMIUM MOLYBDENUM ALLOY IS NOT ALLOWED.
12. SHARP EDGES SHOULD BE PROVIDED ALONG THE ENTIRE PERIMETER ON PLACE '*' ON FINISHED SLINGER. BURRS ARE NOT ALLOWED.
13. BEFORE COATING WITH CHROMIUM MOLYBDENUM ALLOY THE SLINGER SHOULD BE CHECKED FOR DEFECTS BY MAGNETIC-FIELD FLAW DETECTOR AND DEMAGNETIZED.
14. AFTER GRINDING, CYLINDRICAL, BAND 'E' UP TO 0.5 mm WIDE IS PERMISSIBLE AT A DISTANCE OF 12 mm FROM THE EDGE OF THE LOCK GAP.
15. PLACES 'Б' ARE TO BE BLUNTED ON 2 SIDES TO RADIUS OR CHAMFER 0.3 TO 0.6mm TO BE ACCEPTED AS PER STANDARD.
16. LOCK GAP IN FREE CONDITION 18 * 23mm.
17. SLINGER ELASTICITY ON BAND DEVICE IS 2000 TO 2700gr. PROVIDED DIMENSION 'K' IS ENSURED.
18. DIMENSION 'K' FOR NOMINAL DIAMETER.
19. RADIAL CLEARANCE BETWEEN THE SLINGER AND CALIBRATED WASHER $\phi 150^{+0.03}$ mm WITH THE TOLERANCE FOR OVALITY OF CALIBRATED WASHER 0.0025mm MAX. (SEMI DIFFERANCE DIAMETER) MAY BE 0.02mm OVER AN ARC OF 45° AT ONE PLACE OR AT 2 PLACES WITH TOTAL ARC UP TO 45° WITH SUBSEQUENT SMOOTH MERGING TO BOTH SIDES TO 2.5mm TO BE ACCEPTED AS PER STANDARD.
20. NON FLATNESS OF SURFACES 'B' AND 'Г' IS TO BE CHECKED BY PAINTING BETWEEN TWO PLATES. THE WEIGHT OF TOP PLATE IS 1.7kg. THE IMPRINT SHOULD UNIFORMLY COVER 75% MINIMUM OF SLINGER FACE SURFACE. IN THIS CASE THE IMPRINT SHOULD BE 2mm WIDE AND UNINTERRUPTED ALONG THE ENTIRE CIRCUMFERENCE. TO BE SUBJECTED TO SPOT CHECKING ON THE DEMAND OF QD, BUT NOT LESS THAN 10%
21. BUCKLING OF SLINGER IS TO BE CHECKED AFTER TINNING BY PASSING IT THROUGH THE SLIT FIXTURE. THE SLINGER SHOULD FREELY PASS THROUGH THE SLIT IN THE FIXTURE BY ITS OWN WEIGHT. DIMENSION OF SLIT IS 2.44-0.01mm. TRACES LEFT OUT BY MEASURING TOOL (SLIT) ON SURFACES 'B' AND 'Г' ARE ALLOWED.
22. 'TOP' IS TO BE MARKED WITH PAINT AS PER ИЛ-16-73 TYPE ПО-2.5 GOST 2930-62
23. THE LAST THREE DIGITS OF COMPONENT NUMBER ARE TO BE MARKED WITH PAINT AS PER ИЛ16-73, TYPE ПО-2.5 GOST 2930-62.
24. * DIMENSIONS FOR REFERENCE.
25. *1 DIMENSIONS ARE TO BE ENSURED BY TOOL.
26. *2 DIMENSION AFTER CHROMIUM MOLYBDENUM COATING.
27. MARKING WITH A DEPTH NOT MORE THAN 0.05mm ON SURFACE 'Л' IS ALLOWED. TO BE ACCEPTED AS PER STANDARD.

** Cb 304-01-1 24A

PILOT SAMPLE SHOULD BE APPROVED BY A H S P BEFORE BULK PRODUCTION

| ISSUE | DATE | NATURE OF AMENDMENTS |
|---|---|---|
| 24A | 22.01.21 | USED ON NUMBER ADDED. |
| 24 | 10-12-94 | AUTHY LT No. 83353/CQA(CVE)/IND IV dt 6-12-94 |
| 23A | 19-3-92 | VIDE AUTHY LET NO 83353/V46-6/IND IV dt 31-1-92 |

| | | |
|---|---|---|
| DRN | | MATERIAL :- WIRE 3.1x7.5 TY 14-4-229-72 |
| CHD | | USED ON :- ** Cб 3304-01-8Cб |
| TCD | | CONTROLLERATE OF QUALITY ASSURANCE (HEAVY VEHICLES) AVADI |
| APPD | | |
| DATE | 29.8.87 | |
| SCALE - 4:1 | | TITLE OIL SLINGER RING PISTON |
| DIMENSIONS in mm | | |
| TOLERANCE ON DIMNS UNLESS OTHERWISE STATED IS 2102-69 | | |
| ALL THREADS TO CONFORM TO | | D S CAT NUMBER |
| | | DRAWING NUMBER 3304-08-9 |

TEST MASS 0.04 kg.

TO BE STAMPED OR MARKED WHERE INDICATED THUS = (LETTERS)

ALL SHARP EDGES AND CORNERS TO BE REMOVED UNLESS OTHERWISE STATED MACHINED CORNERS TO HAVE R OUTSIDE R INSIDE EQUIVALENT CHAMFERS ARE PERMISSIBLE.

COMMON TO V92S2 ENGINE

CONTROL No.4269.Dt.11MAR2021 FOR EHA

DRAWING NUMBER
3304-08-11

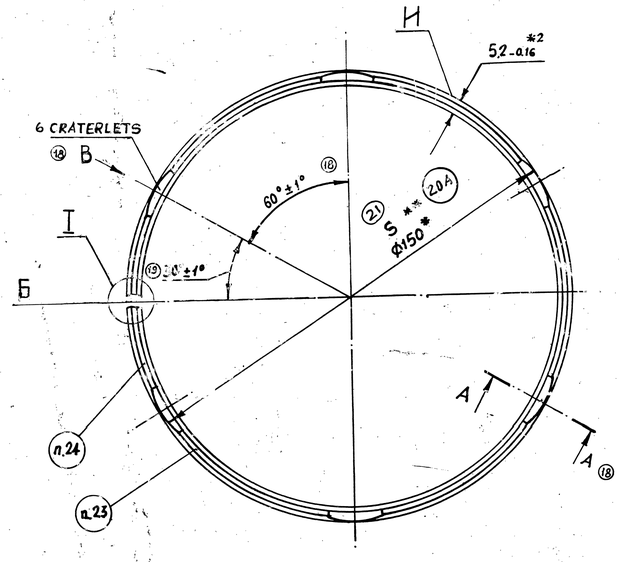


VIEW B TURNED

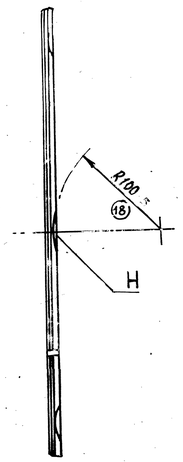


A-A TURNED
SCALE: 10:1

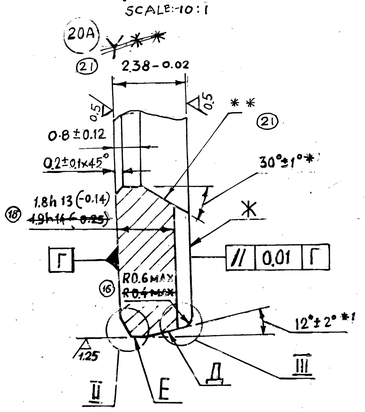


VIEW Б
SCALE 10:1

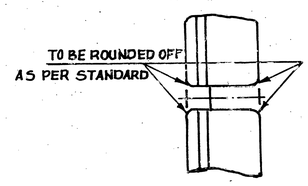


I
SCALE: 5:1

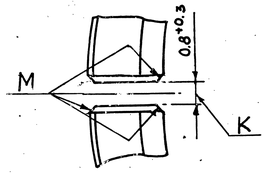


II

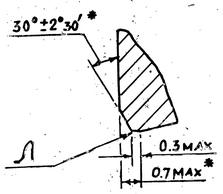


III

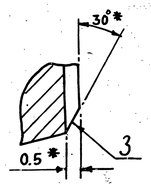


1 INSPECTION GROUP III AS PER TT-11.
2. $HRC_3$ 21.....TO.....29. WITH $HRC_3 \leq 22$ MEASUREMENTS ARE TO BE TAKEN ON SCALE 'B' IN THIS CASE HRB ≥ 96.
3 REQUIREMENTS TO BLANK AS PER TY 14-4-229-72.
4. DIFFERENCE IN DIMENSION 'Ц' SHOULD NOT EXCEED 0.1 mm BEFORE CHROMIUM MOLYBDENUM COATING.
5. ROUGHNESS OF SURFACE 'E' AFTER CHROMIUM MOLYBDENUM COATING IS 0.32
6 CRACKS, ROUGH SPOTS, DENTS AND METALLURGICAL DEFECTS ARE NOT PERMISSIBLE ON OIL SLINGAR SURFACE.
7. COATING OF SURFACES 'Д' AND 'E', Cr. Mo. AS THICK AS 60-120 MICRONS AS PER ИП-212-76. COATING IS TO BE APPLIED IN COMPRESSED STATE.
8 TO BE COATED WITH 01 AFTER CHROMIUM MOLYBDENUM ALLOY IS APPLIED TO AS PER ИП570-84.
9. HV 550-800 FOR SURFACE 'Д' AND 'E' AFTER CHROMIUM MOLYBDENUM ALLOY IS APPLIED, TO BE CHECKED AS PER ИП-212-76.
10. DIFFERENCE IN TOTAL THICKNESS OF CHROMIUM MOLYBDENUM LAYER FOR ONE SLINGER SHOULD NOT EXCEED 0.04 mm.
11. SPALLING OF CHROMIUM MOLYBDENUM LAYER IS NOT ALLOWED.
12. CHROMIUM MOLYBDENUM COATING MAY NOT BE APPLIED ON TO SURFACE '3'.
13. SHARP EDGE IS TO BE PROVIDED ALONG THE ENTIRE PERIMETER OF THE FINISHED SLINGER AT PLACE 'Л', BURRS ARE NOT ALLOWED.
14. BEFORE COATING WITH CHROMIUM MOLYBDENUM ALLOY THE RING SHOULD BE CHECKED FOR DEFECTS BY MAGNETIC FIELD FLAW DETECTOR AND DEMAGNETIZED.
15. CHIPPING OF CHROMIUM MOLYBDENUM COATING IS ALLOWED ON SURFACE 'Д' AT PLACES 'H' UP TO 0.8 mm FROM SURFACE 'Ж' TO BE ACCEPTED AS PER STANDARD.
16. PLACES 'M' ARE TO BLUNTED ON 2 SIDES TO RADIUS OR CHAMFER 0.3 TO 0.6 mm. TO BE ACCEPTED AS PER STANDARD.
17. RING GAP IS 18 TO 23* mm IN A FREE STATE.
18. ELASTICITY OF RING ON A BAND DEVICE 18....25N (1.8....2,5 kgf) WITH DIMENSION K.
19. DIMENSION K FOR NOMINAL DIAMETER.
20. RADIAL CLEARANCE BETWEEN THE SLINGER AND CALIBRATED WASHER $\phi 150^{+0.013}$ mm WITH TOLERANCE FOR OVALITY OF CALIBRATED WASHER NOT MORE THAN 0.0025 mm (SEMI DIFFERENCE OF DIAMETER) MAY BE 0.02 mm OVER AN ARC OF 45° AT ONE PLACE OR AT 2 PLACES WITH TOTAL ARC UP TO 45° WITH SUBSEQUENT SMOOTH MERGING TO BOTH SIDES TO ZERO, CLEARANCE WITH 0.01 mm IS ALLOWED ON ONE OR 2 SIDES OF THE LOCK GAP OVER A LENGTH UP TO 8 mm GAP TO BE ACCEPTED AS PER STANDARD.
21. DEVIATION FROM FLATNESS OF SURFACES 'Г' AND 'Ж' TO BE CHECKED BY BLUEING BETWEEN TWO PLATES. THE WEIGHT OF TOP PLATE IS 1,7 kg, THE IMPRINT SHOULD BE UNIFORMLY SPREAD OVER AT LEAST 75% OF THE SLINGER FACE SURFACE. IN THIS CASE THE IMPRINT SHOULD BE 2 mm WIDE AND UNINTERUPTED ALONG THE ENTIRE CIRCUMFERENCE, TO BE CHECKED AT RANDOM ON THE DEMAND OF QID BUT NOT LESS THAN 10%.
23. "TOP" IS TO BE MARKED.
24. THE LAST THREE DIGITS OF COMPONENT NUMBER TO BE MARKED.
25. DURING MARKING - SOLUTION N8 AS PER ИЛ-581-85, TYPE ПО 2-5 GOST 2930-62.
26* DIMENSIONS FOR REFERENCE.
27 *1 DIMENSIONS ARE TO BE ENSURED WITH TOOL.
28 *2 DIMENSIONS AFTER CHROMIUM MOLYBDENUM COATING.
29 BUCKLING OF SLINGER IS TO BE CHECKED AFTER TIN PLATING, BY PASSING IT THROUGH THE SLOT FIXTURE, SLINGER SHOULD READILY PASS THROUGH THE SLOT IN THE FIXTURE BY GRAVITY, DIMENSION OF SLOT IS 2,44 +0.01 mm
MARKS FROM MEASURING TOOL (SLOT) ARE ALLOWED ON SURFACES 'Ж' AND 'Г'.
** 29A. CHECK SIZE 'K' USING THE FOLLOWING SIZED WASHERS:
(20A) (21) – WITH A DIAMETER OF $150.10^{+0.03}$ mm FOR RING 3304-08-11 R1;
(21) – WITH A DIAMETER OF 150.2[illegible] 0.03 mm FOR RINGS 3304-08-11 R2, ~~R3~~.
** 29B. MARKS R1, R2, ~~R3~~ TO BE APPLIED WITH RESPECT TO THE REPAIR SIZE CATEGORY USING SOLUTION NO. 5 PREPARED ACCORDING TO ИЛ-16-73. LETTERING ПО-3, GOST 2930-62.

(20A) ** ~~REPAIR SIZE DIMENSIONS~~ (21)

| DRAWING NUMBER | X | Y |
|---|---|---|
| 3304-08-11 R1 | DIA 150 | 2.68 -0.02 |
| 3304-08-11 R2 | DIA 150.2 | 2.38 -0.02 |
| 3304-08-11 R3 | DIA 150.2 | 2.68 -0.02 |

(21) ** REPAIR SIZE DIMENSIONS

| CATEGORY | DIMENSION 'S' |
|---|---|
| 3304-08-11-R1 | 150.10 |
| 3304-08-11-R2 | 150.20 |

PILOT SAMPLE SHOULD BE APPROVED BY A H S P BEFORE BULK PRODUCTION

EST. MASS 0.037 kg

TO BE STAMPED OR MARKED WHERE INDICATED THUS * (LETTERS)

ALL SHARP EDGES AND CORNERS TO BE REMOVED UNLESS OTHERWISE STATED MACHINED CORNERS TO HAVE R OUTSIDE R INSIDE EQUIVALENT CHAMFERS ARE PERMISSIBLE.

| ISSUE | DATE | NATURE OF AMENDMENTS |
|---|---|---|
| 21A | 22.01.21 | USED ON NUMBER ADDED. |
| 21 | 10.12.94 | AUTHY LT. No. 63353/COA(CVE)/IND IV dt 6-12-94 |
| 20A | 19.3.92 | Vide Authy Let No 83353/V46-6/IND IV dt 31-1-92. |

DRM
CHD
TCD
APPD
DATE 29.8.87
SCALE - 1:1
DIMENSIONS IN mm.
TOLERANCE ON DIMNS UNLESS OTHERWISE STATED.
ALL THREADS [illegible]

MATERIAL:- WIRE 3.1 × 7.5 TY 14-4-229-72

USED ON:- CB 3304-01-8 CB; Cb 304-01-1 (21A)

CONTROLLERATE OF INSPECTION (HEAVY VEHICLES) AVADI

TITLE:- OIL CONTROL RING, PISTON

D S CAT NUMBER

DRAWING NUMBER 3304-08-11

COMMON TO V9252 ENGINE

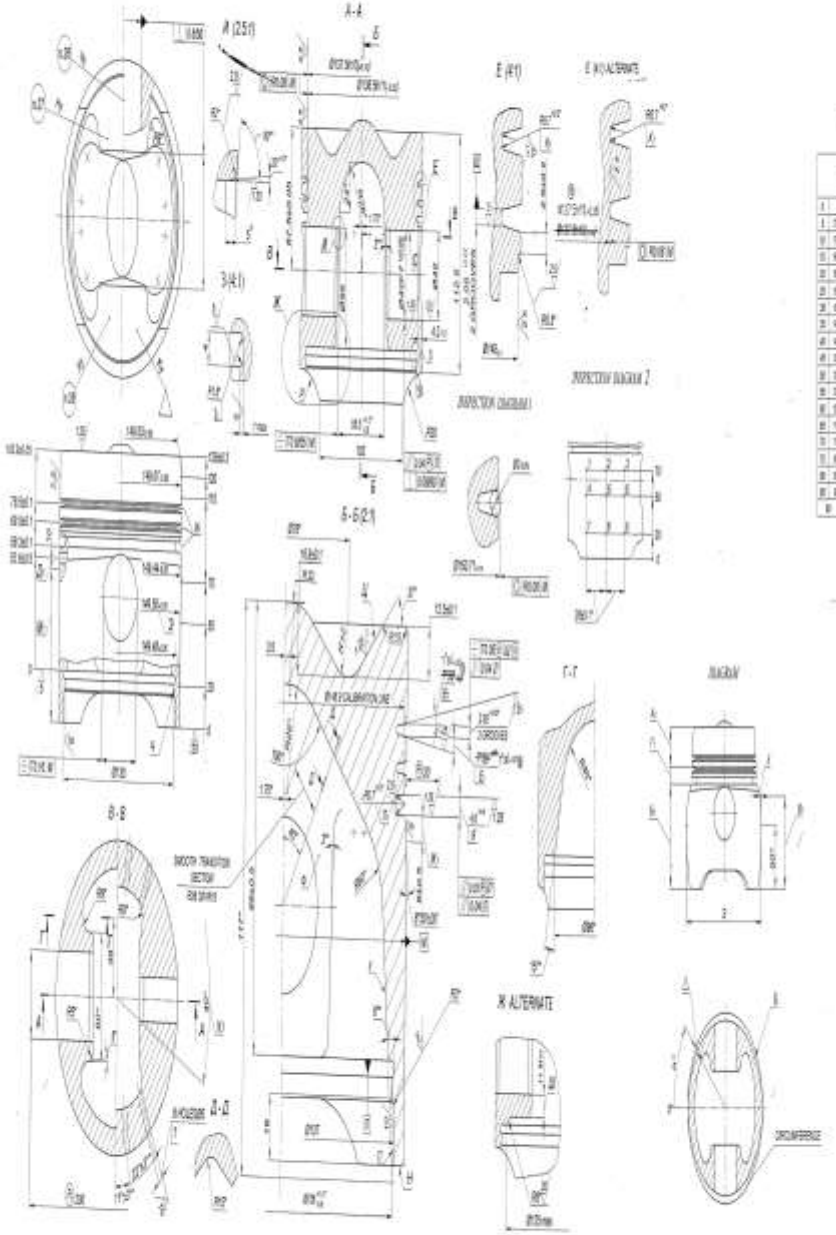


TABLE: 1

| d | L mm | |
|---|---|---|
| | INCREMENT | |
| | A | B |
| 1 | 100 | 0.001 | 0.000 |
| 2 | 110 | 0.001 | 0.000 |
| 3 | 120 | 0.001 | 0.000 |
| 4 | 130 | 0.001 | 0.000 |
| 5 | 140 | 0.001 | 0.000 |
| 6 | 150 | 0.001 | 0.000 |
| 7 | 160 | 0.001 | 0.000 |
| 8 | 170 | 0.001 | 0.000 |
| 9 | 180 | 0.001 | 0.000 |
| 10 | 190 | 0.001 | 0.000 |
| 11 | 200 | 0.001 | 0.000 |
| 12 | 210 | 0.001 | 0.000 |
| 13 | 220 | 0.001 | 0.000 |
| 14 | 230 | 0.001 | 0.000 |
| 15 | 240 | 0.001 | 0.000 |
| 16 | 250 | 0.001 | 0.000 |
| 17 | 260 | 0.001 | 0.000 |
| 18 | 270 | 0.001 | 0.000 |
| 19 | 280 | 0.001 | 0.000 |
| 20 | 290 | 0.001 | 0.000 |
| 21 | 300 | 0.001 | 0.000 |

TABLE: 2

| D | L mm |
|---|---|
| 10 | 0.000 |
| 11 | 0.000 |
| 12 | 0.000 |
| 13 | 0.000 |
| 14 | 0.000 |
| 15 | 0.000 |
| 16 | 0.000 |
| 17 | 0.000 |
| 18 | 0.000 |
| 19 | 0.000 |
| 20 | 0.000 |
| 21 | 0.000 |
| 22 | 0.000 |
| 23 | 0.000 |
| 24 | 0.000 |
| 25 | 0.000 |
| 26 | 0.000 |
| 27 | 0.000 |
| 28 | 0.000 |
| 29 | 0.000 |
| 30 | 0.000 |
| 31 | 0.000 |
| 32 | 0.000 |
| 33 | 0.000 |
| 34 | 0.000 |
| 35 | 0.000 |
| 36 | 0.000 |
| 37 | 0.000 |
| 38 | 0.000 |
| 39 | 0.000 |
| 40 | 0.000 |
| 41 | 0.000 |
| 42 | 0.000 |
| 43 | 0.000 |
| 44 | 0.000 |
| 45 | 0.000 |
| 46 | 0.000 |
| 47 | 0.000 |
| 48 | 0.000 |
| 49 | 0.000 |
| 50 | 0.000 |

1. Inspection gauges Ø as per CCT 1980/345
2. Hardness is 157 HB
3. Blank - forging
4. Acceptance of castings to be done as per TV 1-001-181-84
5. Inclusion of sand is allowed on machined surfaces except surfaces of grooves H, (as per checked specimen)
6. Unspecified limit deviation of dimensions are: H14, h14, ±IT/2
7. Dimension E, is tan checked relative to surface D
8. * Dimensions are measured with tape
9. * Dimensions are given for reference
10. Dimensions D and K, are given in plane E-E
11. Lessening of dimension R is allowed by 0.8 mm over surf. K7
12. Checking of true - concentricity of profile is to be carried out along 8 points. Estimation of profile can diameter as follows: 1.5-1.0-0.5 ...0.15 mm.
- 1 and 2-4 and 5-7 and 8 with respect to [illegible] as difference measurements between points 1 and 3-4 and 6-7 and 8 not exceeding 0.05mm
- 1-2-3 with respect to 4-5-6-7-8-9 ...0.08/100
- 7-8-9 with respect to 4-5-6-7-8-9 ...0.08/100
13. Tolerance of ovality, taper and concavity of surface C should not exceed 0.20mm (even difference of diameters)
14. Mass of piston is 2000 ± 20 gm
15. For adjusting weight of the component, remove metal up to dimension U,
16. Modification of curvature of surface W should be smooth
17. Burrs are not allowed on surface W7 and groove H,
18. Rewelding of metal is allowed on surface C7 (as per checked specimen)
19. Surface J, should be checked with template made to nominal dimensions, in the case the clearance between template and profile should not be more than 0.2 mm
20. Burrs are not allowed
21. Coating of surface W (mass height M, chemical 02) should be carried out as per instruction VIT 1984/1. It is allowed to do coating on surfaces D+C7+F2,C1+K+J and to a height of Δ,
22. Profile of radii R, and S, should be smooth coating is not allowed
23. Circular markings are not allowed in note 17.
24. Smooth transition of oval - barrel shaped profile should be on section 7,
25. Table 1 and 2 are given for manufacturing of template
26. To be marked 05-10
27. To be marked "technological piston number
28. To be marked weight (Three real digits)
29. When stamping and marking refer type S-1-20 GOST 26.008-85 should be used

| | | | |
|---|---|---|---|
| | | | |
| | | | |
| | | | |

DRAWING NUMBER 3304-06-9

SHEET No. 1 OF 1

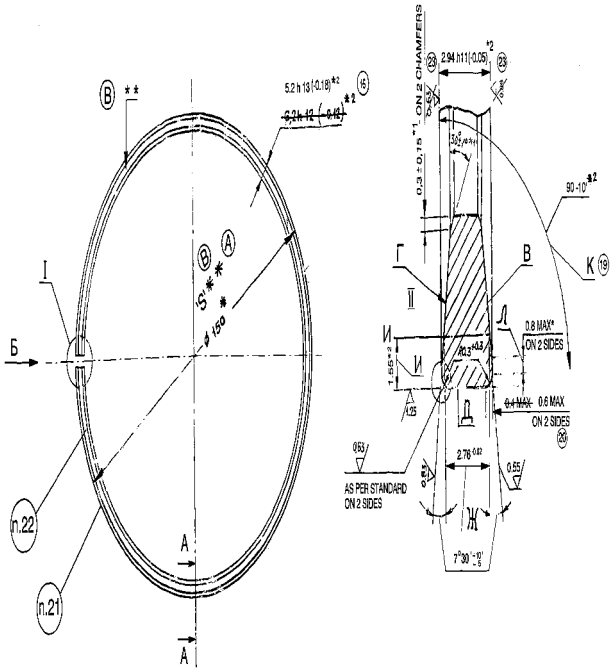


1. INSPECTION GROUP 'III' AS PER TECHNICAL REQUIREMENT TT - 11.
2. HRC 42....50
3. THE RING SHOULD BE SUBJECTED TO HEAT - TREATMENT ON A SPECIAL STAR TYPE MANDREL.
4. BUCKLING OF SURFACES 'B' AND 'I' SHOULD NOT EXCEED 0.05 mm.
5. RING SHOULD NOT HAVE ANY SURFACE MARKS, CRACKS AND METALLURGICAL DEFECTS.
6. THE RING SHOULD BE CHECKED FOR DEFECTS BY MAGNETIC FIELD FLAW DETECTOR AND DEMAGNETIZED BEFORE BEING COATED WITH CHROMIUM MOLYBDENUM ALLOY EVERY BATCH SHOULD BE SUBJECTED TO SPOT CHECKING ON THE DEMAND OF QID.
7. SURFACE 'A' IN COMPRESSED STATE SHOULD BE PROVIDED WITH COATING : Cr-10. AS THICK AS 100-160 MICRONS AS PER UA-212-76. DEPTH OF SPONGY LAYER 30-60µ. SEPERATE SPONGES HAVING DEPTH 30µ MIN ARE PERMITTED.
8. HV 800 TO 1100 OF CHROMIUM MOLYBDENUM BEFORE FORMATION OF SPONGY LAYER TO BE CHECKED AS PER UA - 212 - 76.
9. DEVIATION IN TOTAL THICKNESS OF CHROMIUM MOLYBDENUM LAYER FOR A SINGLE RING SHOULD NOT EXCEED 0.06 mm.
10. ROUGHNESS OF SURFACE 'A' BEFORE FORMATION OF SPONGY LAYER - 0.32
11. SPALLING OF CHROMIUM MOLYBDENUM ALLOY IS NOT PERMITTED.
12. COATING 01 AFTER FORMATION OF SPONGY LAYER AS PER UA- 570-84. TIN LAYER ON SURFACE 'A' MAY NOT TO BE DONE.
13. PLACES 'B' ARE TO BE BLUNTED ON TWO SIDES TO RADIUS OR CHAMFER 0.3 TO 0.6 mm. TO BE ACCEPTED AS PER STANDARD.
14. DIMENSION 'P' FOR NOMINAL DIAMETER.
15. RADIAL CLEARENCE BETWEEN THE RING AND THE CALIBRATED WASHER $ø150^{+0.025}$ mm WHEN THE TOLERANCE FOR OVALITY OF CALIBRATED WASHER ie 0.0025 mm. MAX. (SEMIDEFERENCE DIAMETER) MAY BE 0.02 mm OVER ARC NOT MORE THAN 45° ANY ONE PLACE OR AT TWO PLACES WITH TOTAL ARC IN 45°, LOCATED NOT NEARER THAN 30° FROM THE LOCK GAP. POINT, CLEARENCE IS NOT PERMITTED.
16. NONFLATNESS OF SURFACE 'B' AND 'I' SHOULD BE CHECKED BY PAINTING IN GAUGE WHICH CORRESPONDS TO THE NOMINAL DIAMETER WITH SPECIAL TAPER PLUG WITH WEIGHT 2.5 Kg. THE IMPRINT SHOULD BE IN THE FORM OF UNINTERRUPTED BAND WITH A WIDTH OF 1.5mm OVER THE ENTIRE RANGE.
17. BUCKLING OF RING SHOULD BE CHECKED AFTER TINNING BY PASSING IT THROUGH THE SLIT FIXURE. THE RING SHOULD FREELY PASS THROUGH THE SLIT IN THE FIXURE BY ITS OWN WEIGHT. THE DIMENSION $3^{+0.01}$ mm TRACES LEFTOUT BY MEASURING TOOL ON SURFACES 'B' AND 'I' ARE ALLOWED.
18. LOCK GAP IN FREE CONDITION 18... 22* mm.
19. PISTON RING ELASTICALY 2200 TO 3000 gm ON BAND DEVICE IN CASE DIMENSION 'E' IS PROVIDED.
20. DIMENSION 'H' IS GIVEN FOR CHECKING DIMENSION 'A'.
21. THREE LAST DIGITS OF COMPONENT NUMBER SHOULD BE MARKED.
22. TO BE MARKED 'TOP'.
23. MARKING SHOULD BE DONE WITH SOLUTION No.5 AS PER UA-16-73 TYPE No.3 GOST 2930-62.
24. * DIMENSION FOR REFERENCE.
25. ** DIMENSIONS ARE TO BE ENSURED BY TOOL.
26. ** DIMENSIONS AFTER CHROMIUM MOLYBDENUM COATING.
27. VARIATION IN RADIAL THICKNESS OF RINS SHOULD NOT EXCEED 0.1mm.
28. DIMENSION 'K' SHOULD BE CHECKED IN FREE CONDITION OF RING.
29. BAND 'I' UNIFORM ALONG PERIMETER IS ALLOWED.

Ⓐ * * 29A. CHECK SIZE 'E' USING A SIZED WASHER WITH A DIAMETER OF $150.10^{-0.03}$ mm FOR RING 3304-06-9 $R_1$ AND THAT HAVING A DIAMETER OF $150.20^{+0.05}$ mm FOR RING 3304-06-9 $R_2$.

Ⓑ * * 29B. MARKS $R_1$ OR $R_2$ TO BE APPLIED USING SOLUTION No.5 PREPARED ACCORDING TO Vn 16-73. LETTERING ГО-3 GOST 2930-62.

II ALTERNATE

M 20 : 1

SCALE 20 : 1

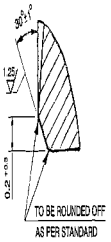


VIEW Б

M 10 : 1

SCALE 10 : 1

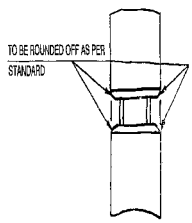


I

M 5 : 1

SCALE 5 : 1

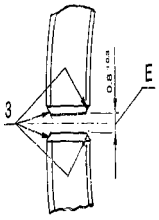


Ⓐ ~~* * REPAIR SIZES DIMENSION~~

Ⓑ

| CATEGORY | DIMENSION 'S' |
|---|---|
| 3304 - 06 -9 R1 | 150. 2 |
| 3304 - 06 - 9 R2 | 150. 5 |

Ⓑ REPAIR SIZE DIMENSION * *

| CATEGORY | DIMENSION 'S' |
|---|---|
| 3304 - 06 -9 R1 | 150 - 10 |
| 3304 - 06 - 9 R2 | 150 - 20 |

PILOT SAMPLE SHOULD BE APPROVED BY A H S P BEFORE BULK PRODUCTION.

Ⓑ EST. WT. (Kg) 0.045 ** | TO BE STAMPED OR MARKED WHERE INDICATED THUS # ( LETTERS)

ALL SHARP EDGES AND CORNERS TO BE BLUNTED UNLESS OTHERWISE STATED MACHINED CORNERS TO HAVE R OUTSIDE R INSIDE EQUIVALENT CHAMFERS ARE PERMISSIBLE.

| ISSUE | DATE | NATURE OF AMENDMENTS |
|---|---|---|
| B | 8.12.94 | AUTHY.LT.No.83353/CQA/CVD/ IND IV dt 6.12.94. |
| A | 19-9-92 | VIDE AUTHY.LT. No.83353/V46-8/ IND IV dt 31-1-92. |

| | | |
|---|---|---|
| DRN | Sd/= | |
| CHD | Sd/= | |
| APPD | Sd/= | |
| DATE | 23.8.1987 | |
| SCALE: 1 : 1 | | |

DIMENSIONS IN mm

TOLERANCE ON DIMNS UNLESS OTHERWISE STATED IS : 2102 - 69

ALL THREADS TO CONFORM TO

MATERIAL :- STEEL 4 x 5 Ⓜ 1C-ш GOST 5950-73

USED ON :- Сб3304-01-8сб

CONTROLLER OF QUALITY ASSURANCE (HEAVY VEHICLES) AVADI

TITLE :- PACKING RING PISTON

D S CAT NUMBER

DRAWING NUMBER 3304-06-9

SIZE A1

KVD No. 78076

INDIANISED BASED ON RUSSIAN ORIGINAL ISSUE - NIL

Varadarajan (P. VARADARAJAN) Dt. 23 Apr 10. JTO (D)

DRAWING NUMBER
Cb.304-01-1

SHEET No. 1 OF 1

# INSPECTION DIAGRAM

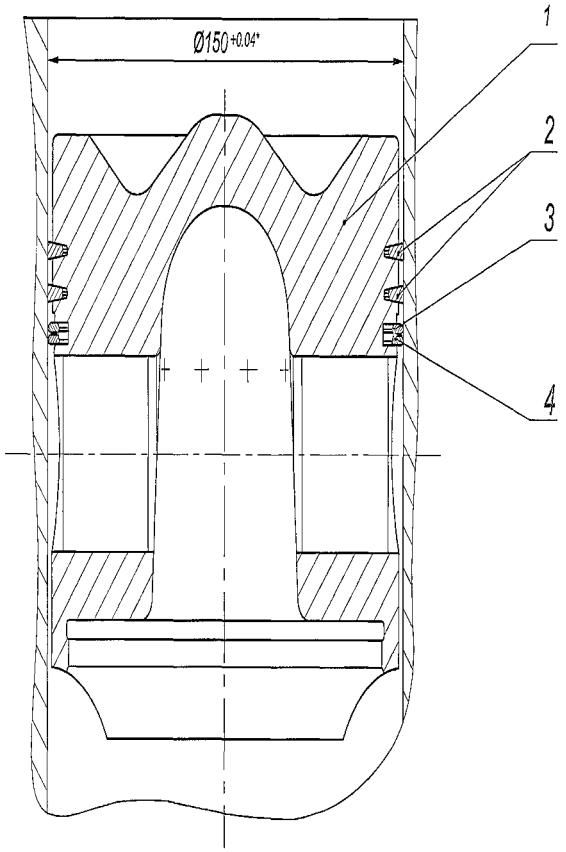


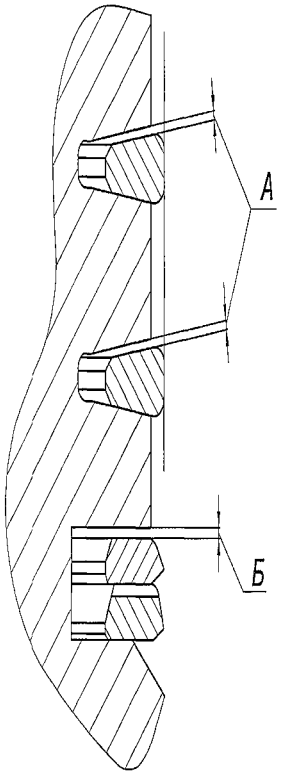


1. Use special fixture for putting rings on piston maximum setting of ring ends in the fixture should not exceed 41mm.

2. While putting rings on the piston the mark "Top" should face to combustion chambers.

3. After putting rings on piston grooves, the rings should be checked for free rotation in all grooves. The rings should not get struck when moving in the groove.

4. Measure clearance A 0.13...0.07 mm in the plane perpendicular to the piston pin axis with special liner type fixture having openings, where measurement can be carried out. Measurement to be taken without rings in 3rd groove.

5. Measure clearance Б 0.10 mm maximum on piston.

6. * Dimensions is given for reference.

DRG. INDIANISED BASED ON RUSSIAN ORIGINAL ISSUE - 4

PILOT SAMPLE SHOULD BE APPROVED BY A H S P BEFORE BULK PRODUCTION.

| EST. WT. (Kg) | TO BE STAMPED OR MARKED WHERE INDICATED THUS # ( LETTERS) |
|---|---|
| 3.227 | |

ALL SHARP EDGES AND CORNERS TO BE REMOVED UNLESS OTHERWISE STATED MACHINED CORNERS TO HAVE R OUTSIDE R INSIDE EQUIVALENT CHAMFERS ARE PERMISSIBLE.

| ISSUE | DATE | NATURE OF AMENDMENTS |
|---|---|---|

DRN
CHD
APPD
DATE 07/2/07
SCALE:- 1 : 1
DIMENSIONS IN mm
TOLERANCE ON DIMNS UNLESS OTHERWISE STATED IS : 2102 - 69
ALL THREADS TO CONFORM TO

MATERIAL:- —

USED ON:- C5 3305-00-23

CONTROLLERATE OF QUALITY ASSURANCE (HEAVY VEHICLES) AVADI

TITLE:- PISTON WITH RINGS ASSY

D S CAT NUMBER

DRAWING NUMBER Cb.304-01-1

F-3 43 168

SIZE A2

| USED ON | ITEM No. | DRAWING NUMBER | D S CAT NUMBER | DESCRIPTION | QTY | REMARKS |
|---|---|---|---|---|---|---|
| Cb.3305-00-23 | | **Cb.304-01-1** | | **PISTON WITH RINGS ASSY** | | |
| | | **ITEM LIST** | | | | |
| | | | | | | |
| | 1 | 304-05-10 | | PISTON | 1 | |
| | 2 | 3304-06-9 | | PISTON PACKING RING | 2 | |
| | | | | | | |
| | 3 | 3304-08-9 | | PISTON OIL SCRAPER RING | 1 | |
| | 4 | 3304-08-11 | | PISTON OIL CONTROL RING | 1 | |

I/L CREATED BASED ON RUSSIAN ORIGINAL ISSUE – 4

| ISSUE | DATE | NATURE OF AMENDMENTS | ISSUE | DATE | NATURE OF AMENDMENTS |
|---|---|---|---|---|---|
| | | | | | |

| | | | | |
|---|---|---|---|---|
| DRN | | CONTROLLERATE OF QUALITY ASSURANCE (HEAVY VEHICLES) AVADI. | | |
| CHD | | TITLE : **PISTON WITH RINGS ASSY** | | |
| APPD | | | | |
| DATE | 18.5.07 | SHT. NO. 1 OF 1 | D S CAT NUMBER | ITEM LIST FOR **Cb.304-01-1** |