Export Controlled

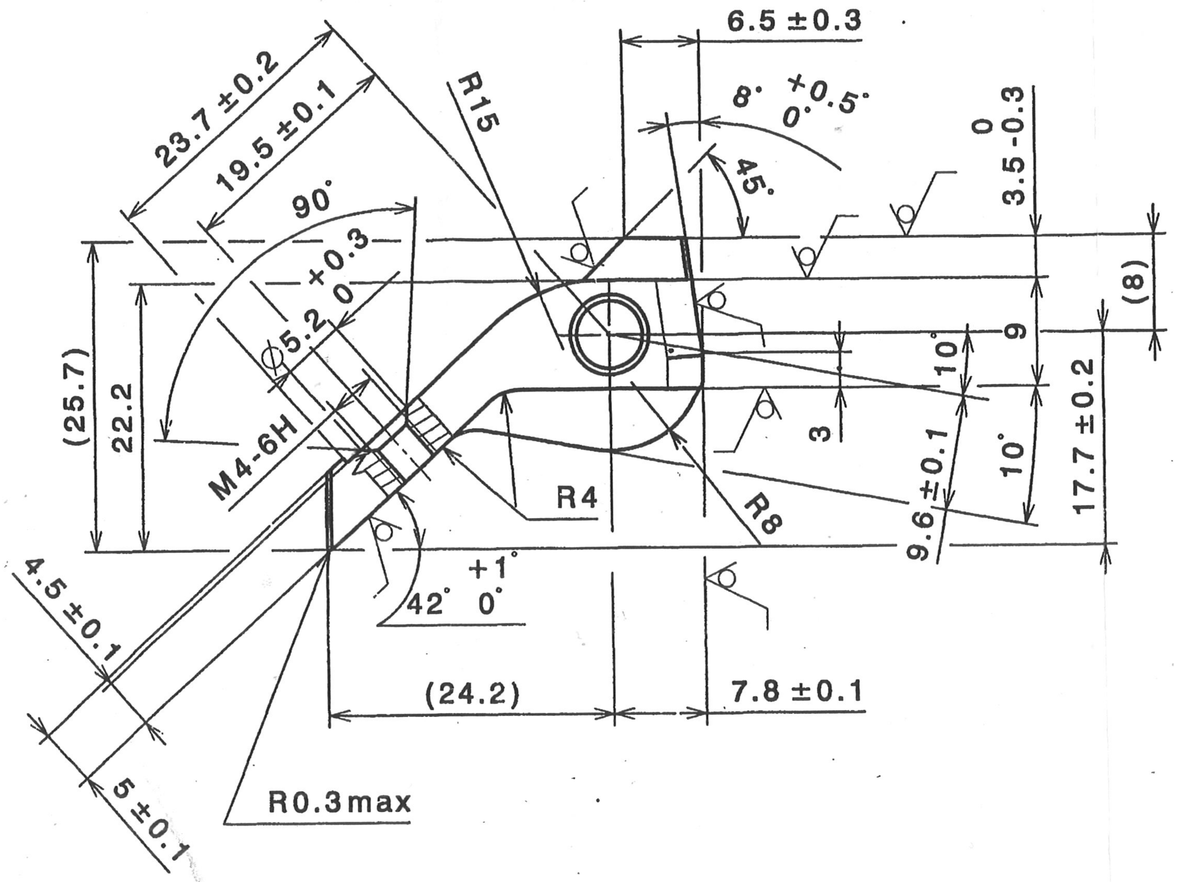

Precisionsgjuten (utan ytavkolning)
Partskarv putsad
Härdad och anlöpt HRN 30= 65±3
Manganfosfaterad enl.301140170- Väteutdrivning

Precision-moulded (Without surface-decarburization)
Part joint polished
Hardened and tempered to HRN 30=65±3
Manganese-phosphatized to 301140170- Hydrogen expelling

INDIGENOUS MATL:- BS: 3146 Pt-1-1974-CLASS-3

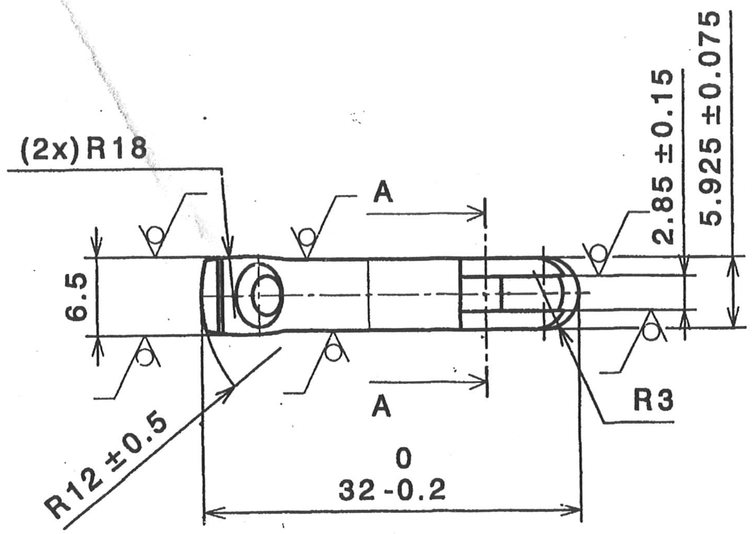

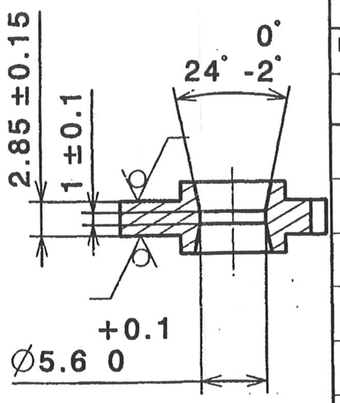

A-A

DATE	AUTHORITY	AMENDMENTS	SIG AHSP	SIG DO
08-6-16	19506-W	INDIGS MATL ADDED		
28-04-15	19401-W	DRG SEALED.		
27-02-15		SCANNED & PRINTED WITHOUT CHANGE		

PREV DC :-

DRG SEALED :- 19401-W DT 28-4-15 | SCANNED :- PKA | CHECKED :- GSN

C Q A (W), JABALPUR

Material: ---	
Ytbehandling Surface treated	Artikelnummer Part number: F1303-007330
Generell ytjämnhet General surface roughness: Ra 6.3	Skala Scale: 2:1
Skarpa kanter brutna Sharp edges broken: R 0.5	
Form- och lägetol enl. Form & pos tol acc. to: ISO 1101	Hålkäl Fillet: --
Generell tolerans General tolerance: ISO 2768-mK	Generell radie General radius
Utfärdad av Issued by: Ulf Johansson	Datum Date yyyy-mm-dd: 2011-10-05
Dokumentstatus Document status: AUTHORIZED	Change order number: 601006271
Godkänd av Approved by: Anders Nyman	Datum Date yyyy-mm-dd: 2011-11-02
Informationsklass Classification: COMPANY RESTRICTED	
Dokumenttitel Document title: EXTRACTOR M3	Dokumentnummer Document number: 304063111
FFV Ordnance AB	Utgåva Issue: 1 / Sida Sheet: 1/1

2005 FFV Ordnance AB

EXPORT CONTROLLED

This document and the information contained herein is the property of FFV Ordnance AB and must not be used, disclosed or altered without FFV Ordnance AB prior written consent.
2005 FFV Ordnance AB

ORIGINAL SIZE A4

Isometric view
Scale: 1:1

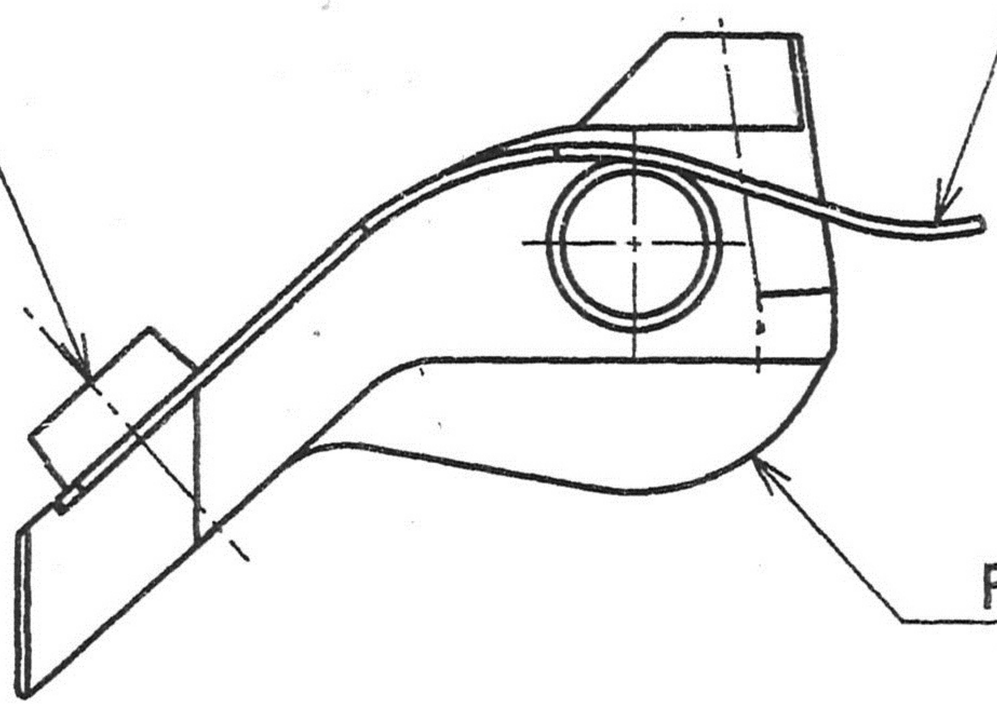

28-04-15	19401-W	DRG SEALED		
2-3-15		SCANNED & PRINTED WITHOUT CHANGE		
DATE	AUTHORITY	AMENDMENTS	SIG AHSP	SIG DO

PREV DC

DRG SEALED: 19401-W DT 28-4-15	SCANNED: MK	CHECKED:- P.R.Yadh

C Q A (W), JABALPUR

Ytbehandling Surface treated			Artikelnummer Part number F1303-007320
Generell ytjämnhet General surface roughness	Skala Scale 2:1	—	
Skarpa kanter brutna Sharp edges broken			
Form- och lägetol enl. Form & pos tol acc. to —	Hålkäl Fillet	Generell tolerans General tolerance -	Generell radie General Radius
Utfärdad av Issued by Driton Kllokoqi	Datum Date yyyy-mm-dd 2012-09-10	Dokumentstatus Document status FASTSTÄLLT	Change order number 601006849
Godkänd av Approved by Katrin Svensson	Datum Date yyyy-mm-dd 2012-09-12	Informationsklass företagssekretess Classification Company Confidentiality COMPANY RESTRICTED	
Informationsklass exportkontroll Classification Export Control EXPORT CONTROLLED		Informationsklass försvarssekretess Classification Defence Secrecy NOT DEFENCE RESTRICTED	
Dokumenttitel Document title Extractor, Assy M3		Dokumentnummer Document number 304067873	
FFV Ordnance AB		Utgåva Issue 1	Sida Sheet 1/1

This document and the information contained herein is the property of FFV Ordnance AB and must not be used, disclosed or altered without FFV Ordnance AB prior written consent.
2005 FFV Ordnance AB

Art ändr / Art rev	Utg / Edition	Ändr nr / Rev No.	Ä0 nr och ändringsbeskrivning / Revision order No. and description of the revision	Utförd / Done	Datum / Date	Godkänd / Approved
-	B	1	B2	Borb	050421	18.5.M EMP

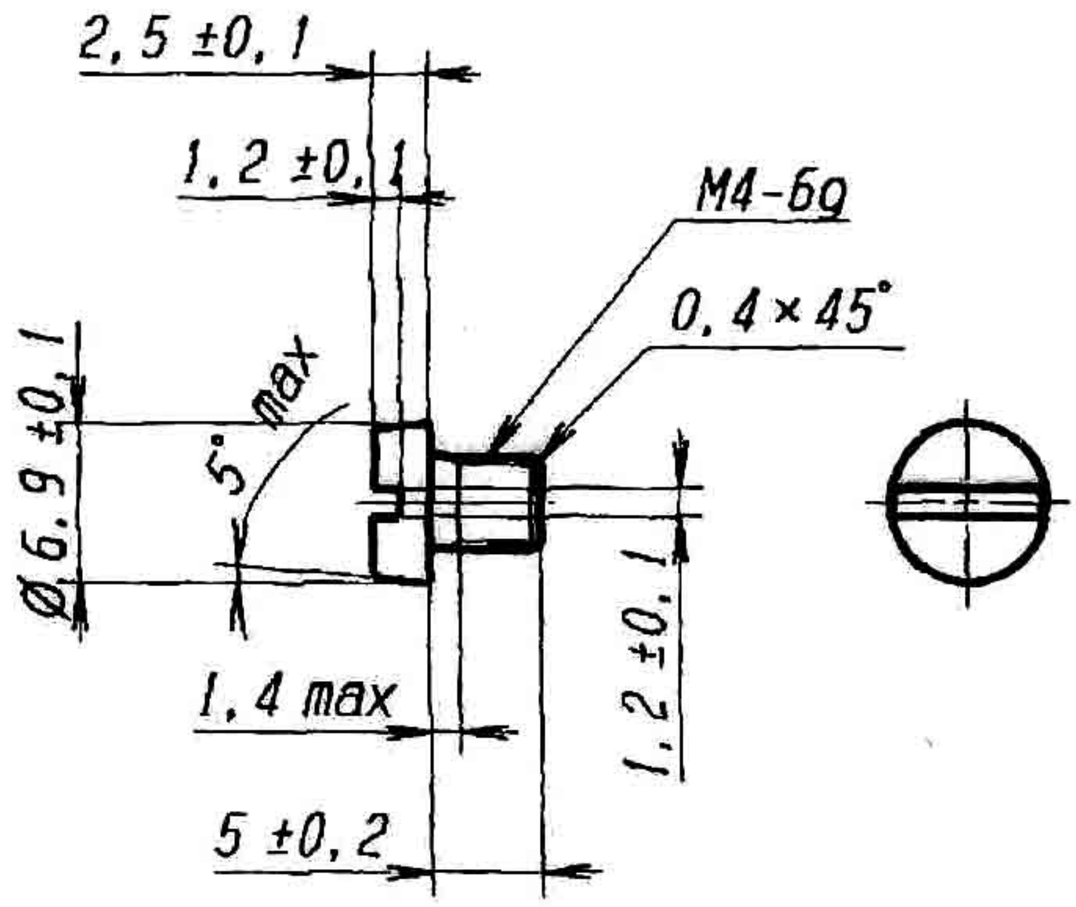

Ytbehandlad:Elektrolytiskt zink-järnbelagd och svartkromaterad Fe/Zn-Fe 8 C_4

Surface treated:Electroplated coating of zinc-iron and black chromated Fe/Zn-Fe 8 C_4

		02-5-07	19047-W	DRAWING SEALED		
		20-06-06		SCANNED & PRINTED WITHOUT CHANGE		
SCANNED	PKA	DATE	AUTHORITY	AMENDMENTS	SIG AHSP	SIG DO
CHECKED	KNP	CQA(W), JABALPUR				

Material: SS Stål/Steel 1957-04 alt EN 10277-3-1.0726+C640

Där ej annat anges gäller / Unless otherwise stated the following applies

Ytjämnhet / Surface roughness enl/acc to SS 672: 6.3

Ytbehandlad/Surface treated

Fordringsklass enligt / Requirements classified acc to: TR/Spec 0 817 418

Mått -före- efter ytbehandling / Dim -before- after surface treatment

Gradad/Deburred	Hörnkal/Fillet	Tol enl/Tol acc to	Form och lägetol enl / Form & pos tol acc to	Massa cirka / Mass approx
R 0,3 max eller/or 0,3 max x45°	R 0,3 max -min-	ISO 2768-mK	ISO 1101	

Konstr/Ritad / Designed/Drawn	Ritningsgr/Översatt / Drawing checked/Transl	Produktionsgr / Production checked	Godkänd / Approved	Dokumentstatus / Document status	Skala / Scale
Wesa	Limj/Borb	KAN/Borb	Lbt/Borb		2:1

Datum / Date	Konstruktionsgr / Design checked	Kontrollerbarhetsgr / Inspectability checked	Datum / Date	Informationsklass / Classification	Farligt gods / Dangerous goods
000329	Limj/Borb	RJ/Borb	000524	INTERN	Nej/No

Benämning/Title: Spårskruv m cyl huv / Slotted cheese head screw / M4x5

M3 (IN)

FFV Ordnance AB

Ritningsnummer/Drawing No.: F1303-030740

Art ändr / Art rev: -

Utg / Edition: B

Ingår i/Included in

Denna handling är FFV Ordnance AB:s egendom och får inte utan skriftligt medgivande kopieras, delges tredje man eller användas för annat ändamål

This document is the property of FFV Ordnance AB and must not be reproduced, disclosed to any third party or used in any unauthorized manner without written consent

This document and the information contained herein is the property of FFV Ordnance AB and must not be used, disclosed or altered without FFV Ordnance AB prior written consent.
2005 FFV Ordnance AB

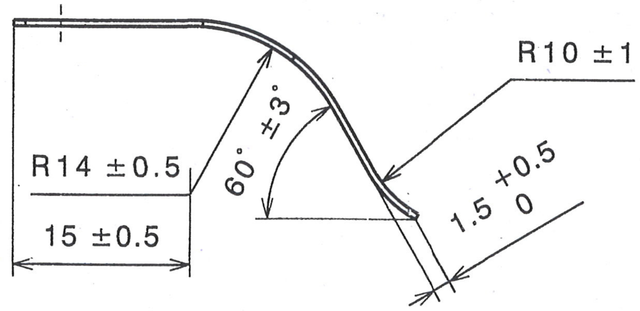

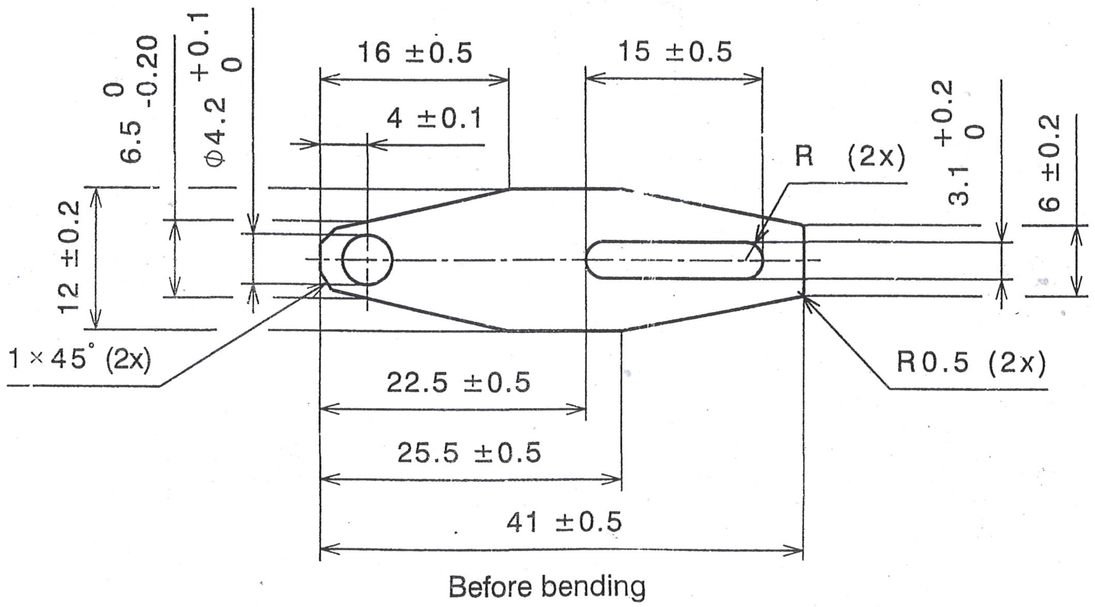

Before bending

Heat treatment: Hardened and tempered to HRN30 = 62-69
Thickness of plate: 0.5±0.017
Edges well rounded

INDG MATL:- IS:2507-1975 GRADE 70 C6 WITH RESTRICTION OF S% & P% 0.025 MAX FOR EACH IN ANNEALED CONDITION.

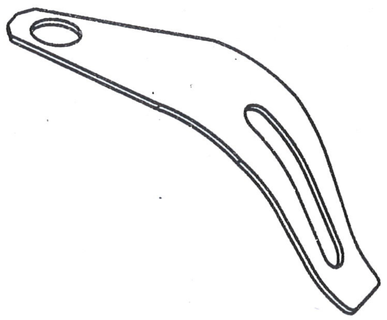

27-02-15		SCANNED & PRINTED WITHOUT CHANGE		
DATE	AUTHORITY	AMENDMENTS	SIG AHSP	SIG DO
PREV DC				
DRG SEALED: 19401-W DT 28-4-15		SCANNED: MK	CHECKED: GSN	

C Q A (W), JABALPUR

Material: Steel SS 1778 or EN 10132-4-1.1231+A			
Ytbehandling *Surface treated*: Black Oxide acc. to 301137555			Artikelnummer *Part number*: F1312-150370
Generell ytjämnhet *General surface roughness*: --	Skala *Scale*: 2:1	--	
Skarpa kanter brutna *Sharp edges broken*: 0.1-0.2			
Form- och lägetol enl. *Form & pos tol acc. to*: ISO 1101	Hålkäl *Fillet*: --	Generell tolerans *General tolerance*: ISO 2768-mK	Generell radie *General radius*: --
Utfärdad av *Issued by*: Malin Skoglund	Datum *Date yyyy-mm-dd*: 2011-12-16	Dokumentstatus *Document status*: AUTHORIZED	Change order number: 601006525
Godkänd av *Approved by*: Anders Nyman	Datum *Date yyyy-mm-dd*: 2012-01-11	Informationsklass *Classification*: COMPANY RESTRICTED	
Dokumenttitel *Document title*: Extractor Spring		Dokumentnummer *Document number*: IRCL-572(GF 215037)	

28-04-15	19401-W	DRG SEALED.	

FFV Ordnance AB — Utgåva *Issue* 11 — Sida *Sheet* 1/1

ORIGINAL SIZE A3 — 100

This document and the information contained herein is the property of FFV Ordnance AB and must not be used, disclosed or altered without FFV Ordnance AB prior written consent.
2005 FFV Ordnance AB