D.S. CAT. NO. 1005-007862

DRAWING CONVENTIONS CONFORM TO JSG-0104.
DIMNS. ARE IN mm. GEN. TOL. 'MEDIUM' IS:2102.

TO BE MARKED ON COMPONENT IN 2 m.m. LETTER SIZE.
□ – Yr. Of Mfg.
△ – MANUFACTURER'S CODE.
D.S. CAT. NO.

CRACKS AT BEND UP TO 3 mm TO BE RECTIFIED BY WELDING.

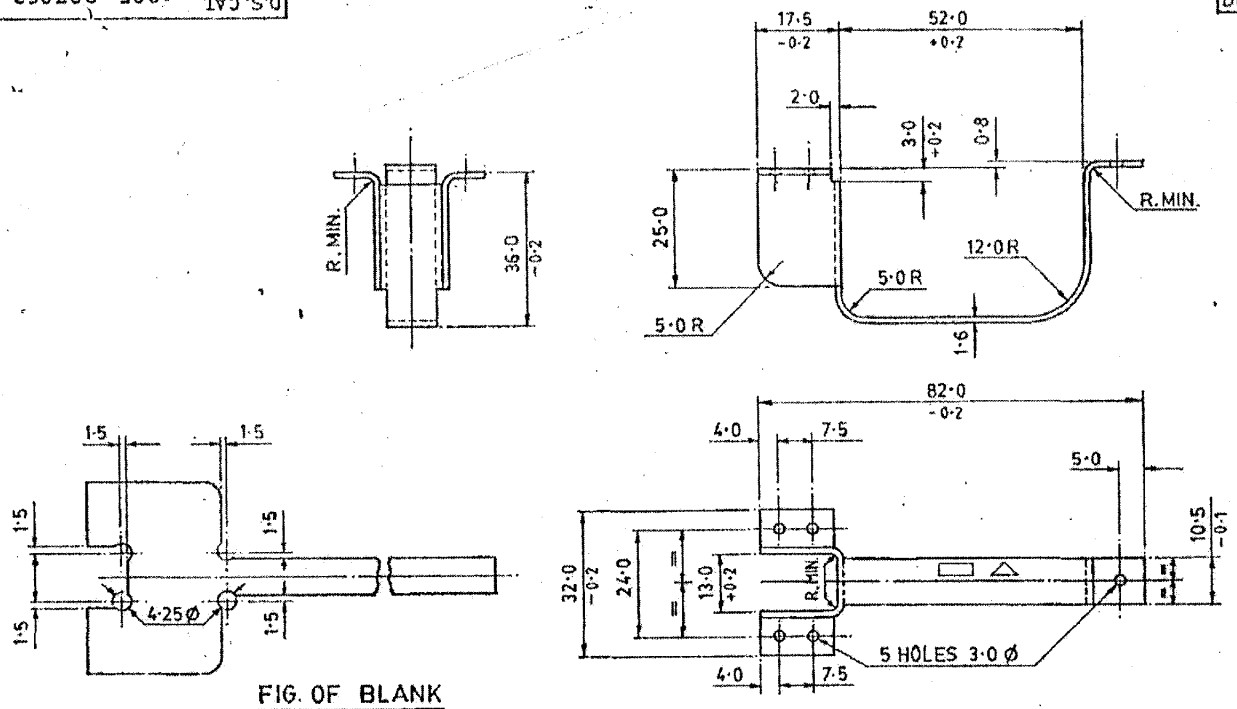

FIG. OF BLANK

Certified as correct copy of drg. on 13.12.98
Works Manager

NSN: B1/1005-72-0000862

19.11.16	26972-SA	MATERIAL AMENDED				DRN.	CHD.	TRD. / COMP.
8.07.10	26518-SA	NSN ADDED				SCALE:- 1:1		EST. MASS.
5.3.02	25281-SA	PROTECTIVE FINISH ADDED				DT. 10.6.98	I/C;D.O.	APPROVED DT. 28-7-81 (NEGATIVE RE-TRACED)
25.2.2000	24642-SA	MARKING NOTE AMENDED & PLACE OF STAMPING SHOWN IN DRG.	C/5			MATERIAL:- IS:7226-1974 DESIGNATION C-80		
16-6-98	24120-SA	PROFORMA CHANGED, NOTE DELETED, MARKING NOTE ADDED, NEG. RE-TRACED AND DRG. PROV. RE-SEALED.						
		PREVIOUS D.C. NOS 23713-SA & 24095-SA.		COPY	COPY			
DATE	AUTHY.	BRIEF RECORD	ZONE	I/C;D.O.	G.O.	H.T./HARDNESS:- 275 TO 325 H.V.		
SEALED:-		PROV. D.C. NO. 23713 – SA, DT. 6-3-97		SIGN.				
NOMENCLATURE:-		GUARD, TRIGGER				PROTECTIVE FINISH:- PHOSPHATE TO SPECN. JSS:0465-01:1994 CLASS II (ACCELERATED), OIL FINISH.		

AHSP. CQA(SA), ICHAPUR
ASSY. D.S.CAT. NO. 1005-007841
DGNR'S REF. ARDE SK-2689/80
PART NO.
DRG. NO.
D.S. CAT. NO. 1005-007862

Create PDF files without this message by purchasing novaPDF printer (http://www.novapdf.com)