1	2	3	4	5	6	7
27.		Assembly drawing	C5.240 CБ	1		
28		Specification.	C5.270 Sheet 1 Sheet 2	2		
29		Assembly drawing	C5.270Cb	1		
30		Specification.	C5.280 Sheet 1 Sheet 2	2		
31		Assembly drawing	C5.280Cb	1		
32		Specification.	C5.320	1		
33		Assembly drawing	C5.320Cb	1		
34		Specification.	C5.490	1		
35		Assembly drawing	C5.490Cb	1		
36.		Drawing	CT16-530-34	1		
37.		Drawing	CT531-81	1		
38.		Specification.	CT700-17-00 Sheet 1 Sheet 2	2		
39		Assembly drawing	CT700-17-00CБ	1		
40.		Specification.	CT721-060	1		
41.		Assembly drawing	CT721-060CБ	1		
42		Drawing	CT702-74	1		
43		Drawing	C5.001	1		
44		Drawing	CT.700-00-11	1		
45		Drawing	CT15-00-18	1		

1	2	3	4	5	6	7
46	5	Drawing	CT15-00-19	1		
47		Drawing.	C5.041	1		
48		Drawing	C5.042	1		
49		Drawing	C5.043	1		
50		Drawing	C5.048	1		
51		Drawing	CT165-104	1		
52		Drawing	CT165-105	1		
53		Drawing	CT16-01-07	1		
54		Drawing	CT21-108	1		
55		Drawing	C5-111	1		
56		Drawing	C5-112	1		
57		Drawing.	C5119	1		
58		Drawing	C5.123	1		
59		Drawing	C5.124	1		
60		Drawing	C5.126	1		
61		Drawing.	C5.127	1		
62		Drawing	C5.128	1		
63		Drawing:	C5.129	1		
64		Drawing	C5.130	1		
65		Drawing	C5.131	1		
66		Drawing	C5.132	1		
67		Drawing	C5.133	1		
68		Drawing	C5.134	1		
69		Drawing	C5.135	1		
70		Drawing	C5.136	1		
71		Drawing	C5.137	1		
72		Drawing	C5.138	1		
73		Drawing	C5.144	1		
74		Drawing	C5.145	1		
75		Drawing	C5.146	1		
76		Drawing	C5.147	1		
77		Drawing	C5.148	1		
78		Drawing	C5.149	1		
79		Drawing	C5.151	1		
80		Drawing	C5.153	1		
81		Drawing	C5.157	1		
82		Drawing	C5.158	1		
83		Drawing	CT721-159	1		

1	2	23	4	5	6	7
84.		Drawing	CT721-167	1		
85.		Drawing	CT721-169	1		
86.		Drawing	CT-179	1		
87.		Drawing	C6.188	1		
88.		Drawing	C6.189	1		
89.		Drawing	C5.206	1		
90.		Drawing	C5.212	1		
91.		Drawing	C5.214	1		
92.		Drawing	C5.215	1		
93.		Drawing	C5.219	1		
94.		Drawing	C5.245	1		
95.		Drawing	C5.247	1		
96.		Drawing	C5.248	1		
97.		Drawing	C5. 251	1		
98.		Drawing	C5.252	1		
99.		Drawing	CT16-03-02	1		
100.		Drawing	CT16-03-50	1		
101.		Drawing	CT15-03-51	1		
102.		Drawing	CT15-03-52	1		
103.		Drawing	CT15-03-53	1		
104		Drawing	CT15-03-54	1		
105.		Drawing	CT15-03-55	1		
106.		Drawing	C5.431	1		
107.		Drawing	C5.432	1		
108.		Drawing	C5.433	1		
109.		Drawing	CT16-06-01	1		
110.		Drawing	CT710-07-01	1		
111.		Drawing	5M-1184	1		
112.		Drawing	CT700-14-01	1		
113.		Drawing	X-1482	1		
114.		Drawing	CT700-15-05	1		
115.		Drawing	CT700-17-03	1		
116.		Drawing	CT710-21-02	1		
117.		Drawing	8X-4264	1		
118.		Drawing	7X-4289	1		
119.		Drawing	X3-9509	1		
120.		Drawing	X2-9526	1		
121.		Drawing	X5-9866	1		
		Drawing				

7 6 I 133

1.	2.	3.	4.	5.	6.	7.
122		Drawing.	X2-9891	1		
123	7	Drawing.	X5-10446	1		
124		Drawing.	X1-10557	1		
125		Drawing.	CMC-10-569	1		
126		Drawing.	X3-10834	1		
127		Drawing.	CT-109-86	1		
128		Drawing.	X1-11045	1		
129		Drawing.	X1-11056	1		
130		Drawing.	X9-111-26	1		
131		Drawing.	X1-111-46	1		
132		Drawing.	CT-138-19	1		
133		Drawing.	CT-138-21	1		
134		Drawing.	CT-138-22	1		
135		Drawing.	CT-138-23	1		
136		Drawing.	CT-138-26	1		
137		Drawing.	CT-138-27	1		
138		Drawing.	CT-138-30	1		
139		Drawing.	CT-138-44	1		
140		Drawing.	CT-138-49	1		
141		Drawing.	CT-138-51	1		
142		Drawing.	CT-144-28	1		
143		Drawing.	M11-40975	1		
144		Drawing.	M11-41129	1		
145		Drawing.	X1-491-35	1		
146		Drawing.	X5-491-37	1		
147		Drawing.	CT-504-20	1		
148		Drawing.	CT-504-21	1		
149		Drawing.	CT-522-84	1		
150		Drawing.	CT-523-77	1		
152		Drawing.	CT-528-34	1		
153		Drawing.	CT-528-35	1		
154		Drawing.	CT-16-529-85	1		
155		Drawing.	CT-16-530-35	1		
156		Drawing.	CT-531-74	1		
157		Drawing.	CT-531-78	1		
158		Drawing.	ГТ-10-1074	1		
		Drawing,	X1-490-116	1		

S-7

8 I133

1.	2.	3.	4.	5.	6.	7.
159	9	Drawing	X6-490-118	1		
		Total number	of sheets	172.		

S-8

7

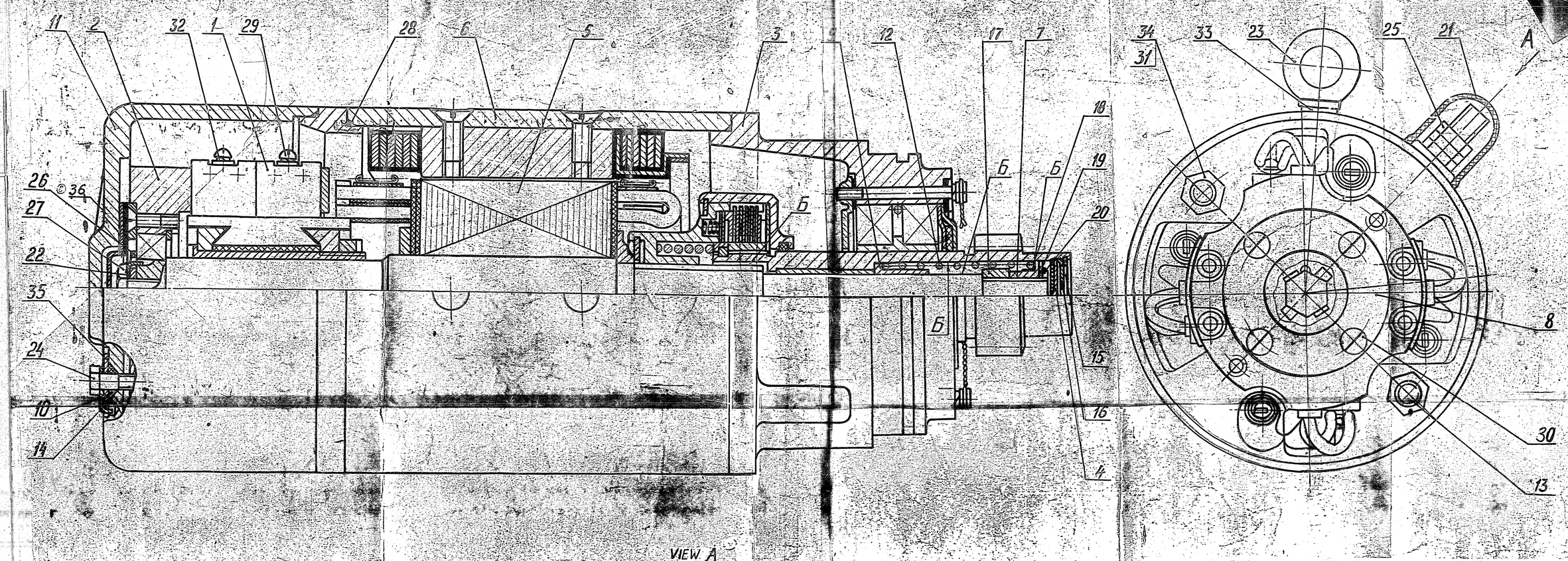

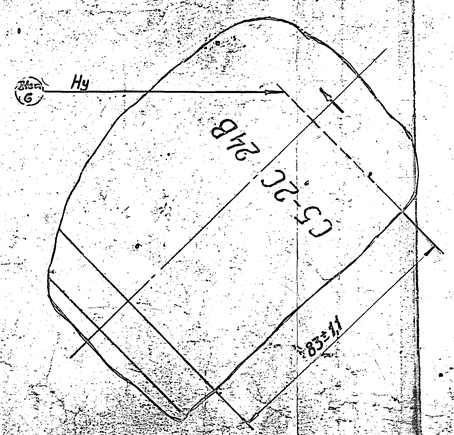

1) Secure parts, Ref. Nos. 3, 2, 11, 23 with sealing compound y-30 M GOST 13489-79.

2) Before assembly, apply lubricant on surface Б, place lubricant on bearing from commutator side upto washer ref. no. 36, fill cover ref. no. 8 with lubricant to 2/3 of its volume. Use lubricant ЦИАТИМ 203 GOST 8773-73.

3) Coat parts Ref. Nos. 24, 29, 31 with grey enamel ХВ124 GOST 10144-74 GOST 9151-75.

4) Secure screws ref. no. 30 with grey enamel ГФ92 ХС GOST 9151-75.

5) Mark with type 8 to depth of atleast 0,5 mm as per H0,010,007 Distance between letters and numbers should be approximately equal to 2,0 mm. Coat with varnish НЦ-134 Ty 6-10-1291-77.

6) Starter should comply with technical specifications C 5-2C,000 Ty.

F 133

(13)

PILOT SAMPLE SHOULD BE APPROVED BY A.H.S.P BEFORE BULK PRODUCTION

ISSUE	DATE	NATURE OF AMENDMENTS

DRN SCALE:- 1 : 1
CHD DIMENSIONS IN mm
TCD TOLERANCE ON DIMNS UNLESS OTHERWISE STATED
APPD
DATE 4-11-87 ALL THREADS TO CONFORM TO

EST. MASS 37 Kg

TO BE STAMPED OR INDICATED THUS ⊕ I (LETTERS)

ALL SHARP EDGES AND CORNERS TO BE REMOVED UNLESS OTHERWISE STATED MACHINED CORNER TO HAVE A OUTSIDE R 0.5mm EQUIVALENT CHAMFERS ARE PERMISSIBLE

MATERIAL:- —— USED ON:- —

CONTROLLERATE OF INSPECTION (HEAVY VEHICLES) AVADI

TITLE: STARTER ASSY

D S CAT NUMBER

DRAWING NUMBER C5-2C-000 C6

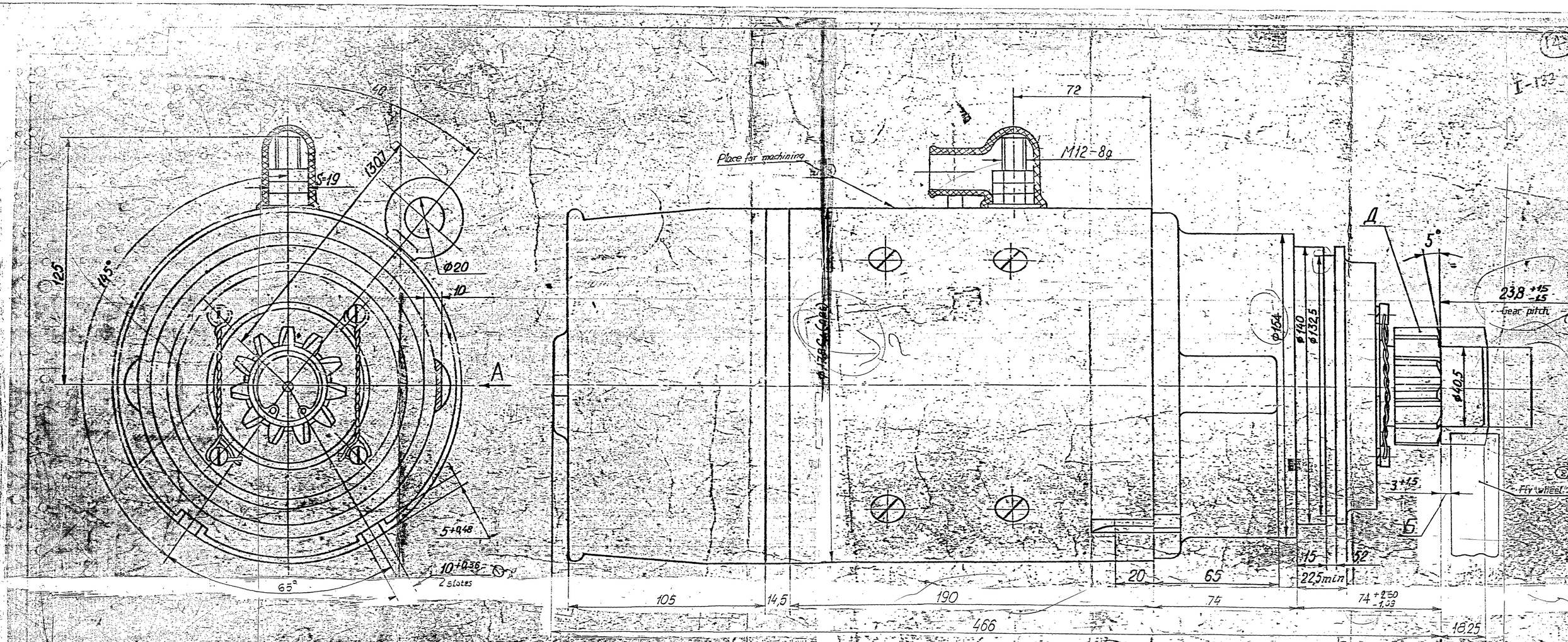

1) While mounting starter on article it is necessary to observe the following.

a) Lateral clearance between gear teeth of end-piece and rim of fly wheel should be held within the limits of dimension B.

b) Clearance between faces of gear teeth of end-piece and rim of fly wheel should be held within the limits of dimension 5.

c) Dimension Г should be held when teeth pair of one or two gears is worn-out.

2) Rotation should be clock – wise from the drive side.

3) Clearance Б may be increased upto 5,2 mm when fly wheel Б of diesel engine is rotated.

4) Hardness of fly wheel teeth HRC should be 35 to 42, and of gear teeth Д of starter obtained by HFC should be HRC 42 to 47.

DATA OF GEAR Д	
Corrected module	4.5
Pitch circle diameter	49.5
Tip diameter	60.5
Base-circle diameter	41.5
Pressure angle	20°
Number of teeth	11
Addendum modification coefficient	0.222

PILOT SAMPLE SHOULD BE APPROVED BY A.H.S.P BEFORE SULK PRODUCTION

ISSUE	DATE	NATURE OF AMENDMENTS
DRN		SCALE:- 1:1
CHD		DIMENSIONS IN mm
TCD		TOLERANCE ON DIMNS UNLESS OTHERWISE STATED
APPD		ALL THREADS TO COMPORM TO
DATE	4-14-80	

EST. MASS 3,7 Kg

TO BE STAMPED OR INDICATED THUS # LETTERS 1

ALL SHARP EDGES AND CORNERS TO BE REMOVED UNLESS OTHERWISE STATED MACHINED CORNER TO HAVE R OUTSIDE R INSIDE EQUIVALENT CHAMFERS ARE PERMISSIBLE

MATERIAL —— USED ON:- C5-2C-000

CONTROLLERATE OF INSPECTION HEAVY VEHICLES) AVAD

TITLE: STARTER LAY OUT DRAWING

D S CAT NUMBER

DRAWING NUMBER C5-2C-000FG

5M-1184

Rz 80

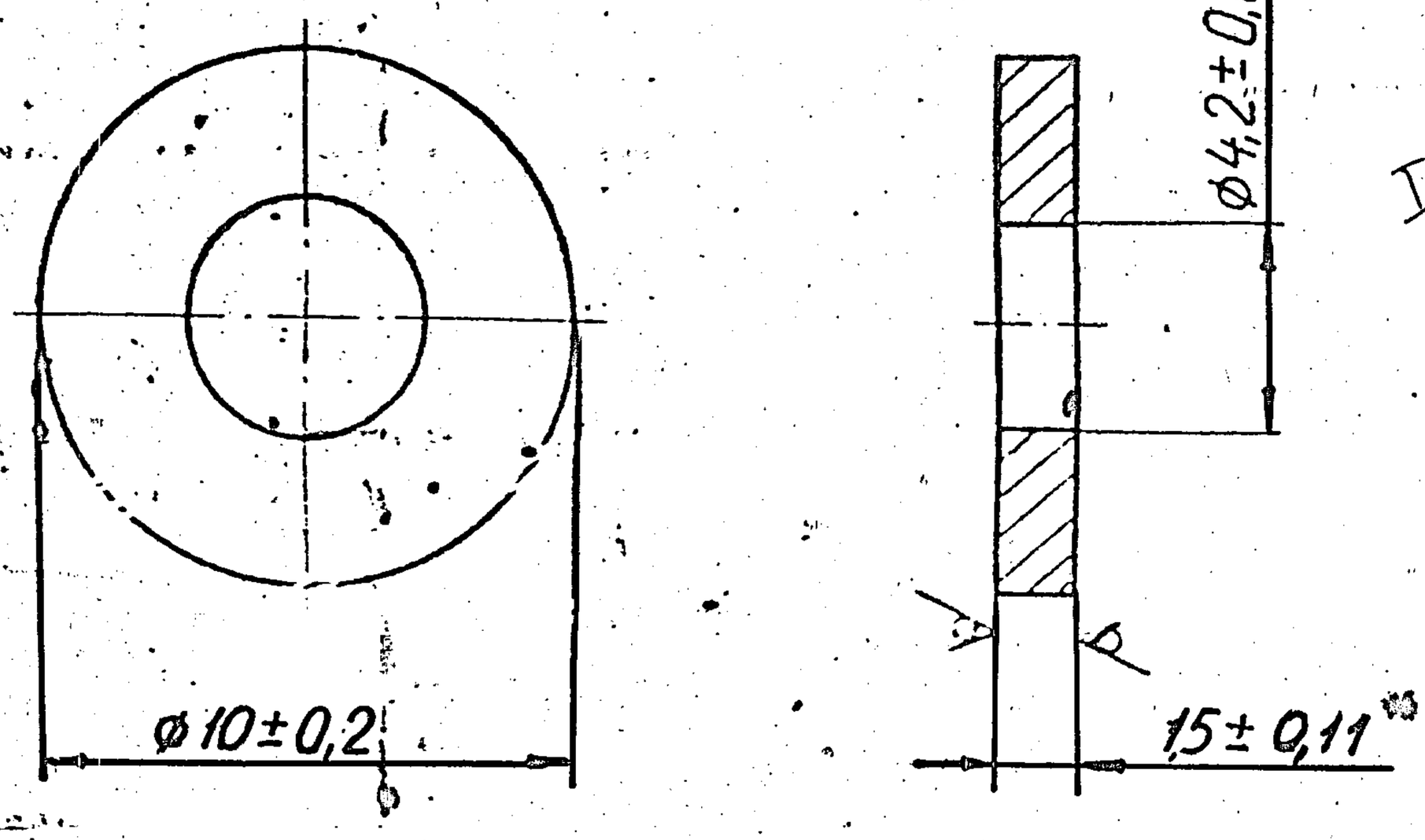

1) Dimension marked with * sign is given for reference.

2) Composition of solution for chromatization should be as per Ч-252-78.

DESIGNATION	COATING
5 M - 1184	Zinc-plating, 6 micron thickness, chromatization.
-01	Cadmium - plating, 6 microns thickness chromatization.

** PLATE Б 1,5 GOST 19904-74 / 4 II 10 GOST 16523-70

PILOT SAMPLE SHOULD BE APPROVED BY A H S P BEFORE BULK PRODUCTION.

ISSUE	DATE	NATURE OF AMENDMENTS

DRN GNSA | SCALE:- 5:1
CKD | DIMENSIONS IN mm
TCD | TOLERANCE ON DIMNS UNLESS OTHERWISE STATED
APPD | ALL THREADS CONFORM TO
DATE 4-11-87

EST. MASS 0,01 g

TO BE STAMPED OR MARKED WHERE INDICATED THUS ✠ (LETTERS)

ALL SHARP EDGES AND CORNERS TO BE REMOVED UNLESS OTHERWISE STATED MACHINED CORNERS TO HAVE R OUTSIDE R INSIDE EQUIVALENT CHAMFERS ARE PERMISSIBLE

MATERIAL :- ** SEE ABOVE

USED ON :- C5-014CБ

CONTROLLERATE OF INSPECTION (HEAVY VEHICLES) AVADI

TITLE: WASHER

D S CAT NUMBER

DRAWING NUMBER 5M -1184

7X-4289

(134)

Перед прямен
СТ-710

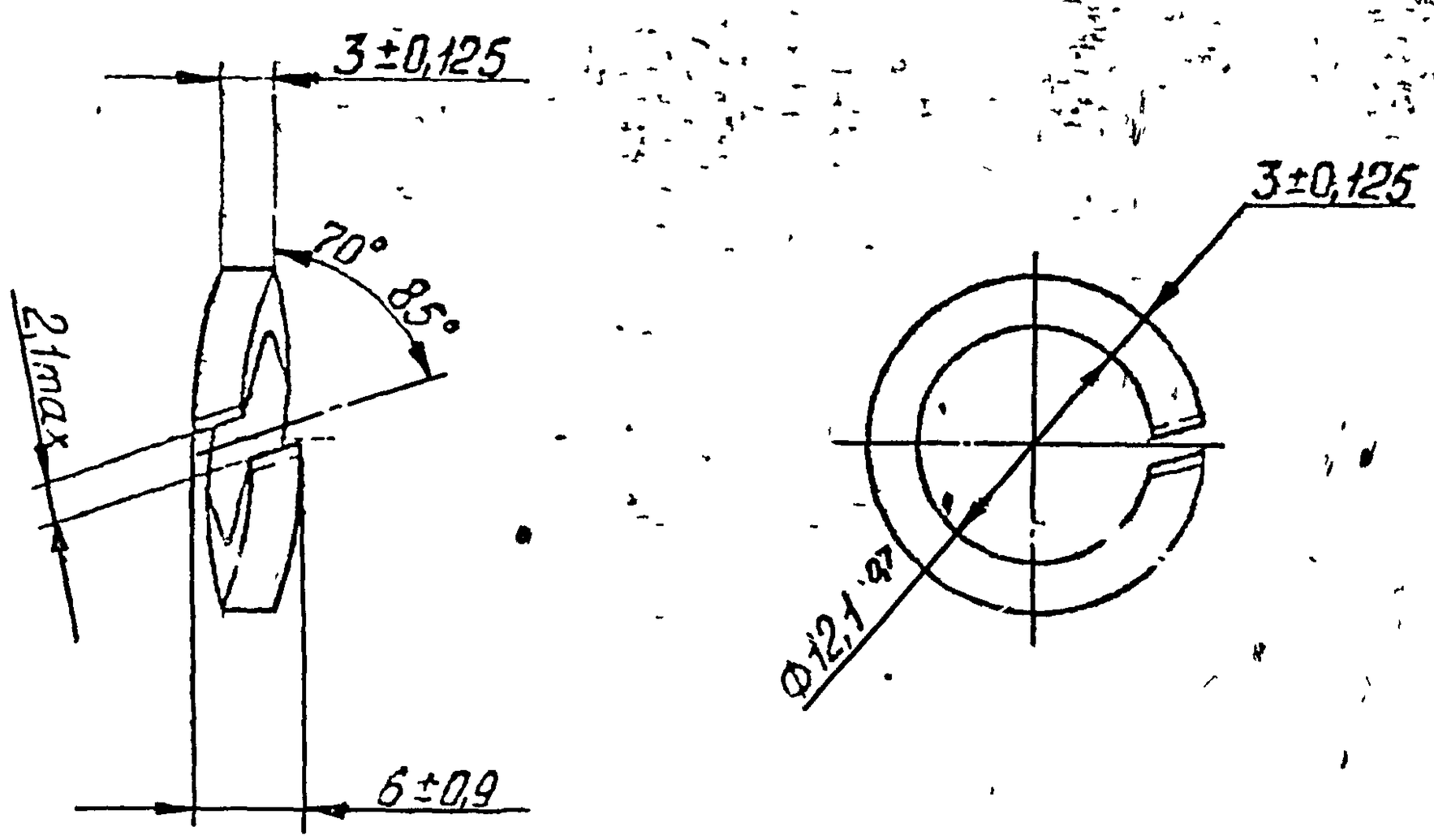

(138)

I-133

1) Coating - Chemically parkerization; oiling

2) Coating of chemical oxidation, oiling is also allowed

3() Other technical requirements are to be as per GOST 6402-70

4) Duplicate is made from GOST 6402-70.

S/134

PILOT SAMPLE SHOULD BE APPROVED BY A.M.S.P BEFORE BULK PRODUCTION

			EST. MASS 3 357 grams	TO BE STAMPED OR INDICATED THUS * (LETTERS)
			ALL SHARP EDGES AND CORNERS TO BE REMOVED UNLESS OTHERWISE STATED MACHINED CORNER TO HAVE R OUTSIDE R INSIDE EQUIVALENT CHAMFERS ARE PERMISSIBLE	
ISSUE	DATE	NATURE OF AMENDMENTS		
DRN		SCALE:- 2:1	MATERIAL:- STEEL 65Г GOST-1050-74	USED ON :- Cs 2C 000CB
CHD		DIMENSIONS IN mm	CONTROLLERATE OF INSPECTION (HEAVY VEHICLES) AVADI	
TCD		TOLERANCE ON DIMNS UNLESS OTHERWISE STATED	TITLE: WASHER (12,65Г,06 GOST 6402--70)	
APPD			D S CAT NUMBER	DRAWING NUMBER 7X -4289
DATE 9-11-87		ALL THREADS TO CONFORM TO		

8X-4264

(133)

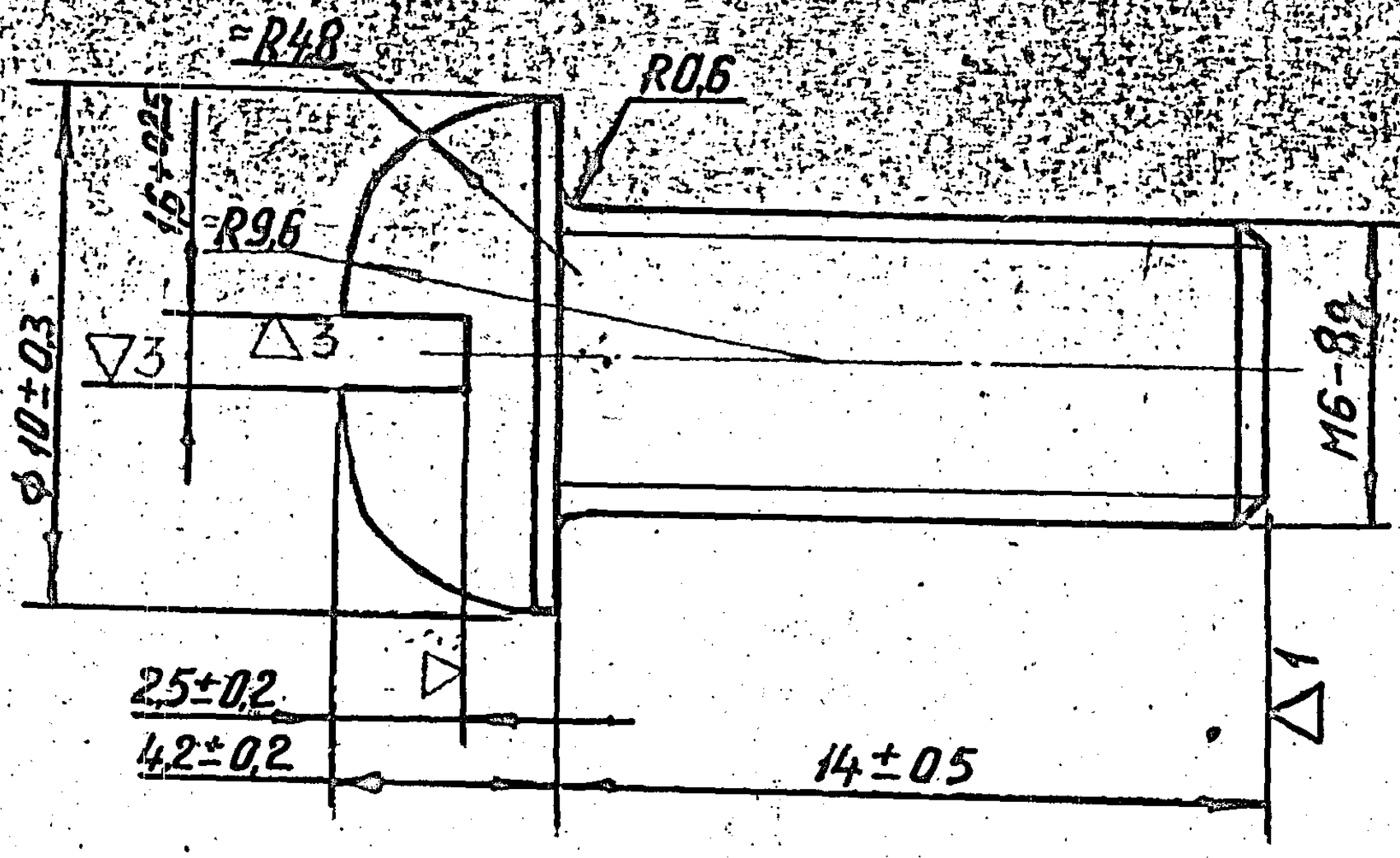

137
I-133

1. Limit deviations of misalignment of head axes and spline with respect to axis of rod should be 0,4 mm.

2. Technical requirements are to be as per GOST 1759-70.

DESIGNATION	COATING
8X-4264	Zinc-plating, 6 micron thickness chromatization.
-01	Cadmium-plating, 6 micron thickness, chromatization.

(133)

PILOT SAMPLE SHOULD BE APPROVED BY AHSP BEFORE BULK PRODUCTION

ISSUE	DATE	NATURE OF AMENDMENTS

EST. MASS 4.420 kg

TO BE STAMPED OR MARKED WHERE INDICATED THUS ⊕ (LETTERS)

ALL SHARP EDGES AND CORNERS TO BE REMOVED UNLESS OTHERWISE STATED MACHINED. CORNERS TO HAVE R OUTSIDE R INSIDE EQUIVALENT CHAMFERS ARE PERMISSIBLE.

DRN

SCALE:- 5:1

CHD

DIMENSIONS IN mm

TCD

TOLERANCE ON DRGS UNLESS OTHERWISE STATED

APPD

DATE 9.11.80

ALL THREADS CONFORM TO

MATERIAL:- WIRE 5.2-10 GOST -5663-79

USED ON:- C5 2C000 CG

CONTROLLERATE OF INSPECTION(HEAVY VEHICLES) AVADI

TITLE: SCREW M6×14, 36, 016 GOST 17473-72

D S CAT NUMBER

DRAWING NUMBER 8X -4264

C5.001

62

Rz 20 (V)

I 133

63

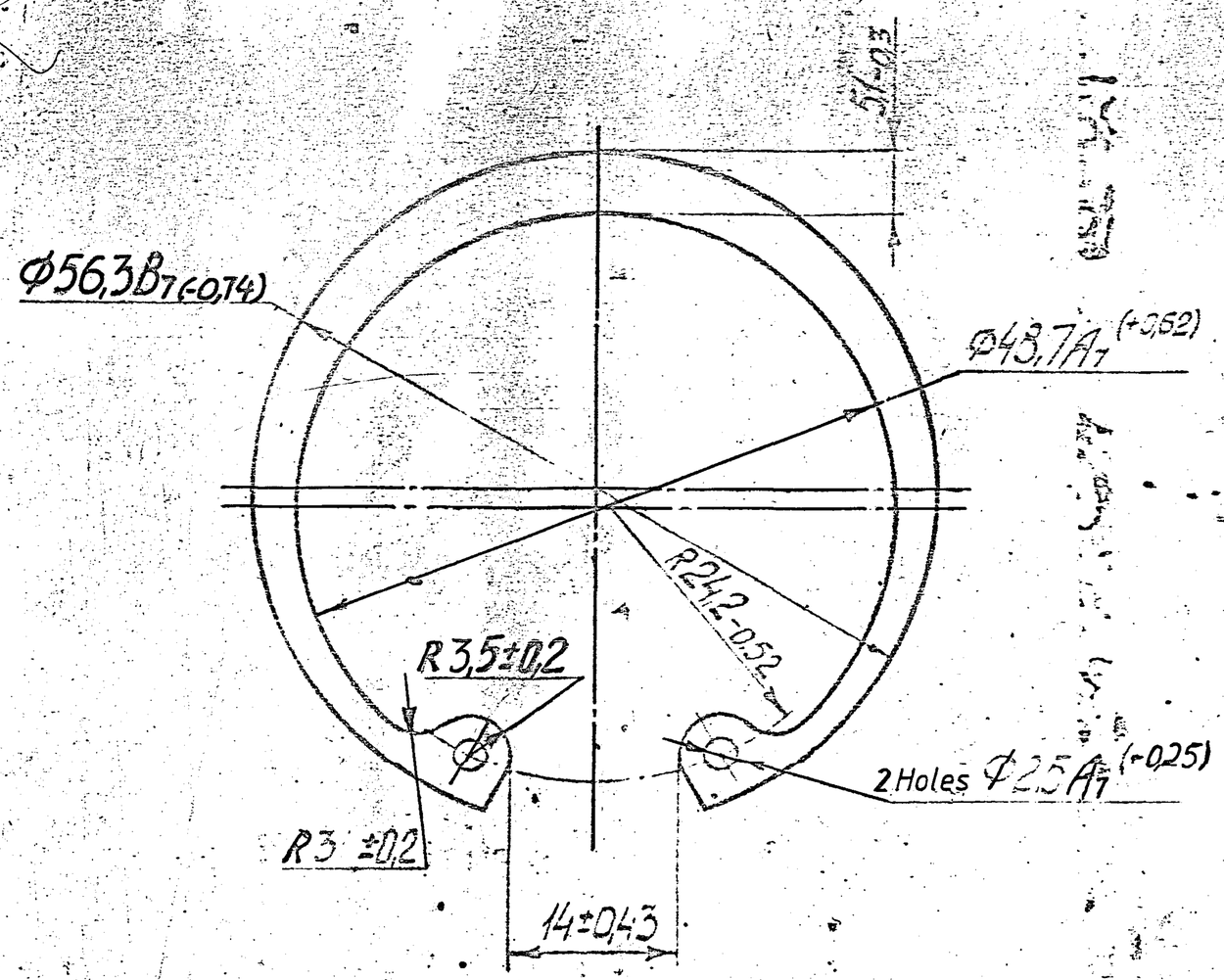

1) HRC 43 to 48.

2) Non-flatness of surface A should not exceed 0,1 mm.

3) Cracks and scales are not allowed on surface of ring

4) Dimension marked with * sign is given for reference.

5) Coating chemically oxidized, oiled.

6) Non-flatness of ends should not exceed 1,0 mm.

62

BAND Y8A-C-1,6
GOST 2283-79

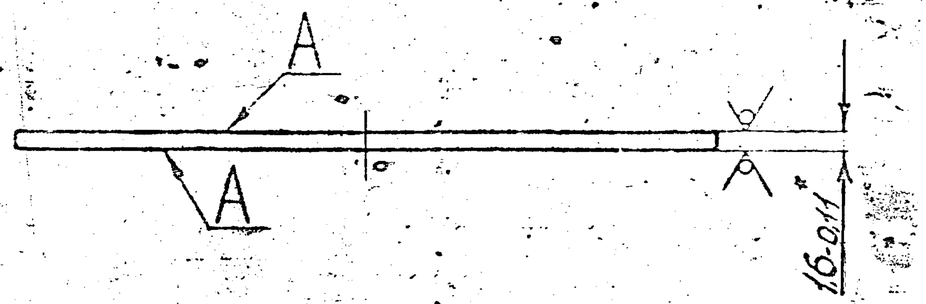

PILOT SAMPLE SHOULD BE APPROVED BY A H S P BEFORE BULK PRODUCTION

			EST. MASS 0,0035 Kg	TO BE STAMPED OR MARKED WHERE INDICATED THUS ✧ LETTERS)
			ALL SHARP EDGES AND CORNERS TO BE REMOVED UNLESS OTHERWISE STATED MACHINED CORNERS TO HAVE R OUTSIDE R INSIDE EQUIVALENT CHAMFERS ARE PERMISSIBLE	
ISSUE	DATE	NATURE OF AMENDMENTS	MATERIAL :- ✧ ✧ SEE ABOVE	USED ON :- C5-014 C6
DRN GNSwf		SCALE:- 2:1	CONTROLLERATE OF INSPECTION(HEAVY VEHICLES) AVADI	
CKD		DIMENSIONS IN mm	TITLE: RING	
TCD		TOLERANCE ON DIMNS UNLESS OTHERWISE STATED		
APPD			D S CAT NUMBER	DRAWING NUMBER C5-001
DATE 4-11-87		ALL THREADS CONFORM TO		

(1)

(8) I 133

STARTER

C5-2C

C5-2C.000

(S-1)

S-I

(2) (1)

LIST OF CONTENTS OF ALBUM No.1

INDEX No. "84/0848713-07-AC-4003"

I 133

S.No	No. of drgs, assemblies, units.	Nomenclature of documents.	No. of drawings (process sheets)	Number of sheets.	No. of final alternate	Remarks.
1.	2.	3.	4.	5.	6.	7.
1.	Album of drawings of starter C5-2C, C5-2C.000.	Title.	C5-2C.000	1		
2.		Specification	C5-2C.000 Sheet 1 Sheet 2 Sheet 3 Sheet 4	4		
3.		Assembly drawing	C5-2C.000Cb	1		
4.		Lay-out drawing	C5-2C.000Г Ч	1		
5.		List of specifications.	C5-2C.000BC	1		
6.		List of reference documents.	C5-2C.000BД Sheet 1 Sheet 2 Sheet 3 Sheet 4 Sheet 5. Sheet 6.	6		
7.		Specifications.	C5.010	1		
8.		Assembly drawing	C5.010Cb	1		
9.		Specifications	C5.014 Sheet 1 Sheet 2	2		

(S 2)

I133 (2)

1.	2.	3.	4.	5.	6.	7.
10.	(3)	Assembly drawing	C5.014СБ	1		
11.		Specification.	C5.016	1		
12.		Assembly drawing	C5.016СБ	1		
13.		Specification.	C5.020	1		
14.		Assembly drawing	C5.020СБ	1		
15.		Specification	C5.021	1		
16.		Assembly drawing	C5.021СБ.	1		
17		Specification.	C5.022	1		
18		Assembly drawing	C5.022СБ	1		
19		Specification.	C5.023.	1		
20.		Assembly drawing	C5.023СБ	1		
21		Specification.	C5.024	1		
22		Assembly drawing	C5.024СБ.	1		
23		Specification.	C5.025	1		
24		Assembly drawing	C5.025СБ	1		
25		Drawing.	C5.220.	1		
26.		Specification.	C5.240	2		
			Sheet 1			
			Sheet 2			

S-3