DRG. NO. :- **CTM-0137**

PROVISIONAL

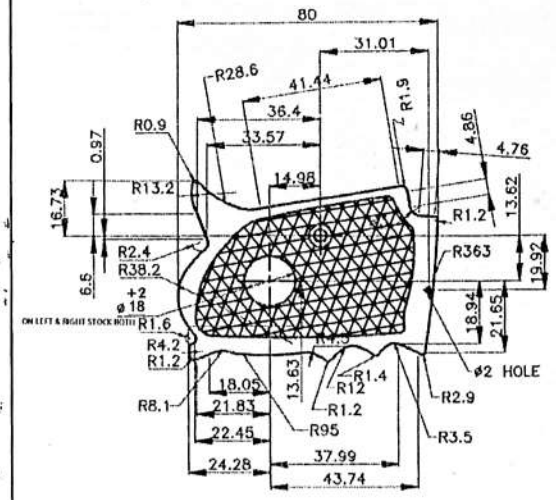

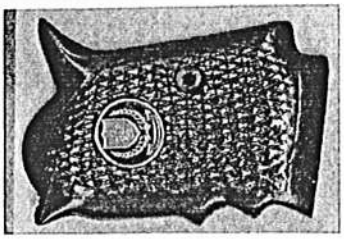

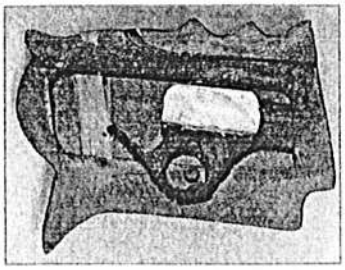

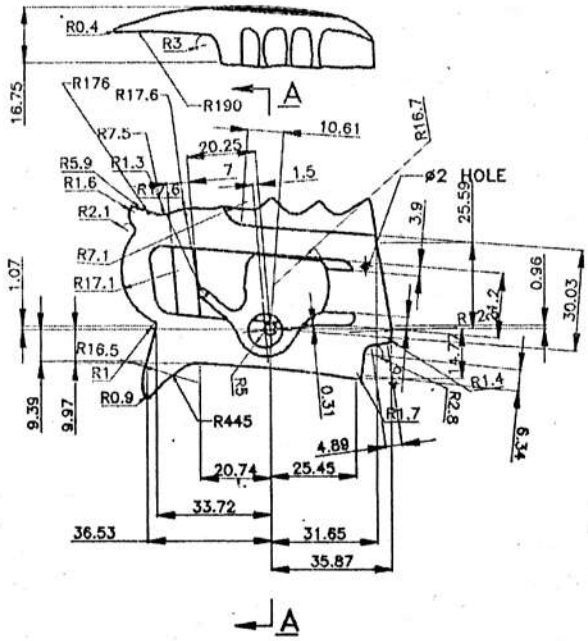

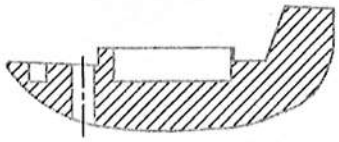

SECTION A–A

NOTE:–
COMPONENT TO BE MANUFACTURED
AS PER APPROVED SAMPLE
HELD AT GSF COSSIPORE

MATL:– POLYLAC 300 EP-1
COLOUR- AS PER APPROVED SAMPLE OF GSF
OR ABS TO GRADE IS:5 NO-446
ABSOLAC -700 OF BAYER ABS LTD.

Prakash 05/12/17

APPVD BY- AWM/PISTOL

		SCHEDULE NO :	COMPT– 0.32" PISTOL (MODIFIED)	STORE DRG. No. CTM–0119
		SCALE= – PROJECTION : THIRD ANGLE		
		DRAWN BY : S.B.	STOCK LEFT FOR MODIFIED PISTOL (0.32")	
		TRACED BY :		
		CHECKED BY :	DRG. NO. :– CTM-0137	
		APPROVED BY : 4/5/17		
DT. & SG.	DESCRIP	CONCURRED BY: JWM/Gun C	M / C :	NO. OF SHTS. : 1
AMENDMENTS		DATE: 05/12/17 SIGN.:	G. & S. FY. COSSIPORE	SHT. NO. : 1.

DRG. NO. :- **CTM-0138**

PROVISIONAL

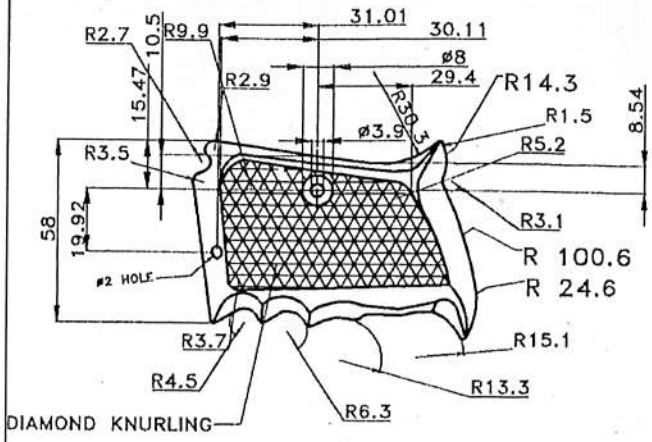

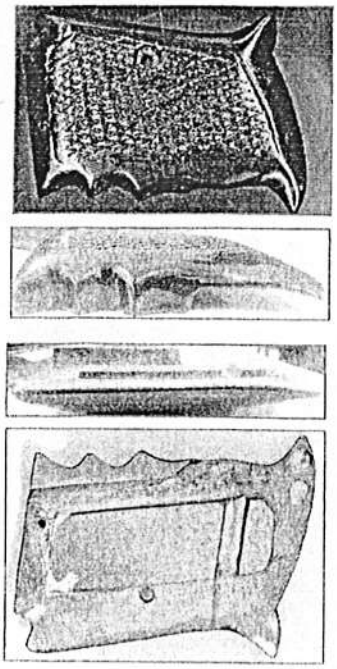

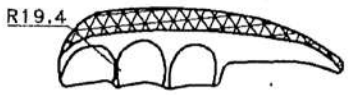

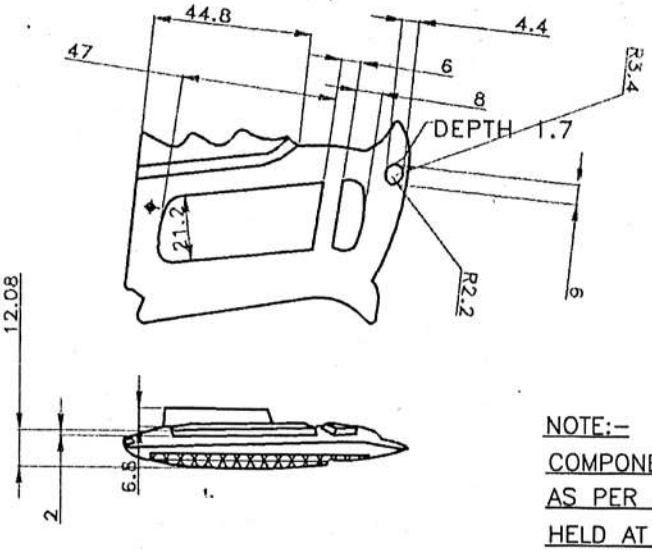

NOTE:-

COMPONENT TO BE MANUFACTURED AS PER APPROVED SAMPLE HELD AT GSF COSSIPORE

MATL:- POLYLAC 300 EP-1
COLOUR- AS PER APPROVED SAMPLE OF GSF OR ABS TO GRADE IS:5 NO-446
ABSOLAC -700 OF BAYER ABS LTD.

Prakash 05/12/17

APPVD BY- AWM/PISTOL

		SCHEDULE NO :		COMPT- 0.32" PISTOL (MODIFIED)	STORE DRG. No. CTM-0119
		SCALE=	PROJECTION : THIRD ANGLE		
		DRAWN BY : S.B.		STOCK RIGHT FOR MODIFIED PISTOL (0.32")	
		TRACED BY :			
		CHECKED BY :		DRG. NO. :- **CTM-0138**	
		APPROVED BY : 4/5/17			
DT. & SG.	DESCRIP	CONCURRED BY: JWM/Gun C		M / C :	NO. OF SHTS. : 1
AMENDMENTS		DATE: 05/12/17	SIGN.: Kalkar	G. & S. FY. COSSIPORE	SHT. NO. : 1.