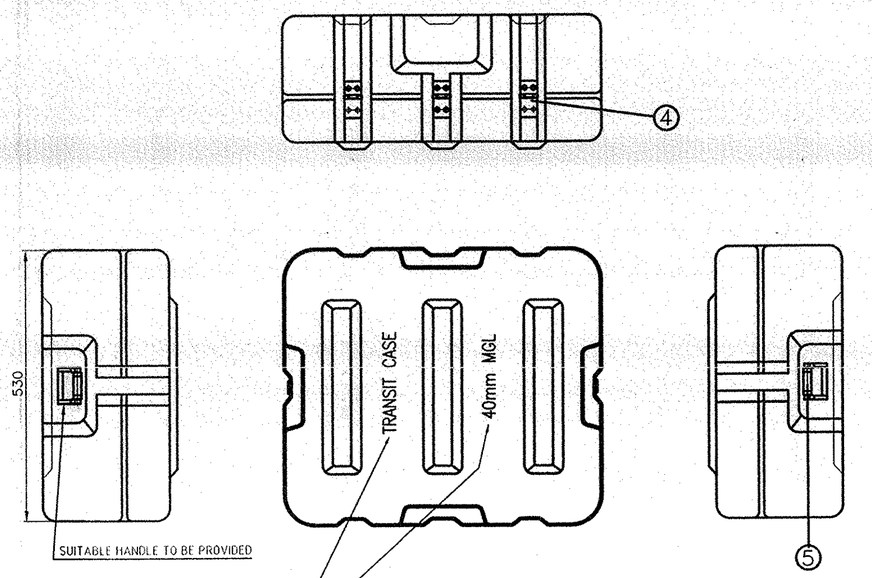

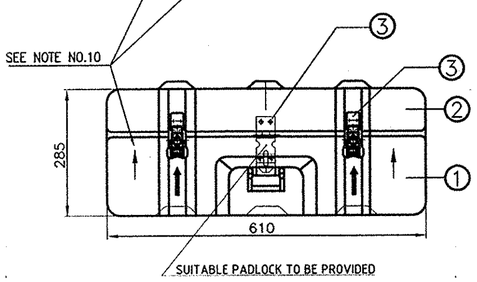

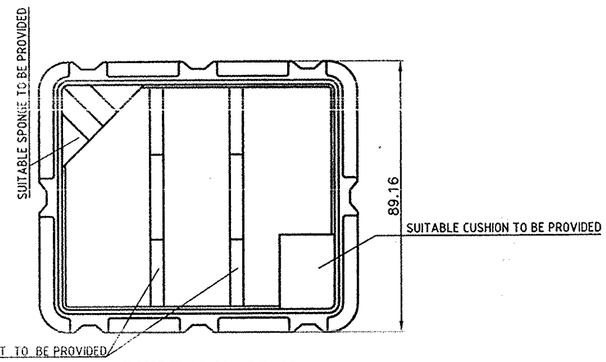

INSIDE VIEW OF TOP

DIMENSIONS FOR BOX WITHOUT CUSSION AND LLDPE ARE AS PER 32 Y 0001 005 C3 (USED IN 40 mm UBGL THREE WEAPON). THE CUSSION & LLDPE ARE MODIFIED TO SUIT (40 mm MGL.

MATL:- 1. FOR TOP & BOTTOM COVER:- LLDPE (LOW DENSITY POLYETHLENE)
2. CUSHION:- XLPE (CROSS LINKED POLYETHYLENE)
3. HANDLE ASSY,LATCH & HINGES : STAINLESS SS 304

INTERNAL DETAILS

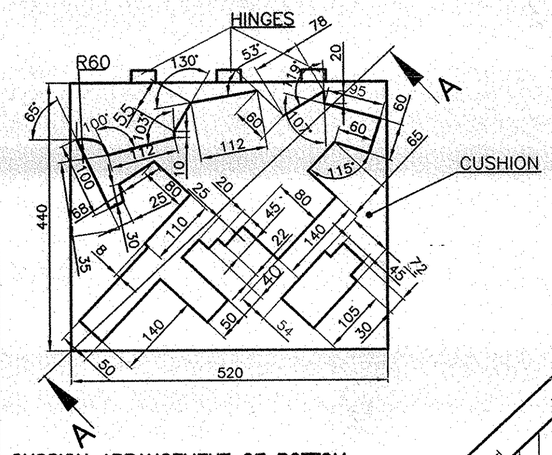

CUSSION ARRANGEMENT OF BOTTOM

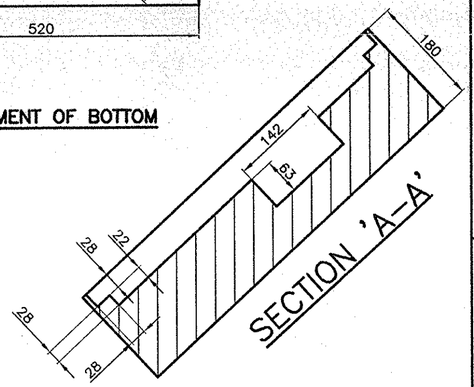

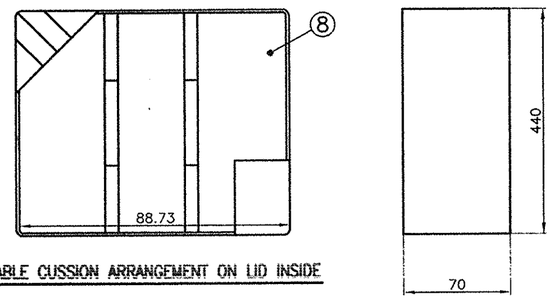

SUITABLE CUSSION ARRANGEMENT ON LID INSIDE

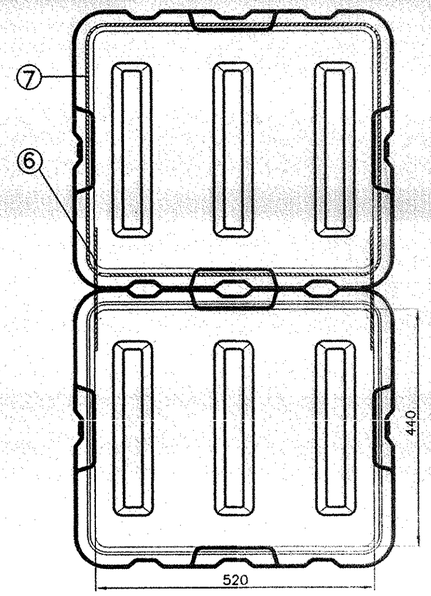

BOX IN OPEN POSITION

NOTES:-

1. BOX EXTERNAL SIZE : 610x300x285
2. BOX INTERNAL SIZE : 520x260x180+70
3. GENERAL TOL. FOR BOX : ±5mm
4. WEIGHT OF BOX : 11.5±0.5 Kg.(APPROX)
5. WEIGHT OF BOX WITH WEPON : 17.1±0.5 Kg.(APPROX)
6. WEIGHT OF SINGLE WEPON : 5.6Kg.±0.5 Kg.(APPROX)
7. BOX COLOUR : OLIVE GREEN
8. WALL THICKNESS : 4-5mm
9. FOAM TOLERANCE. : +5mm
10. ARROW MARK BY SCREEN PRINTING WITH WHITE COLOUR
11. FOR TESTS OF BOX AS PER JSS 0253-01, MIL-STD-810F, ASTM D 1469.

IMPORTANT NOTE:-

DRAWING & THE DIMENSIONS GIVEN FOR CUSHION & LLDPE ARE FOR GUIDANCE ONLY MANUFACTURER SHOULD REFER THE SAMPLE BEFORE QUOTING TENDER.

TRANSIT CASE FOR MGL. DRG. NO TEND : 1937*

ORDNANCE FACTORY, TIRUCHIRAPPALLI.

MATERIAL : 1. LLDPE -Ref. LL 36RA045 UV
2. XLPE - Ref. ASTM C 177, D 2240 & JIS K 6767 LLDPE -Ref. LL 36RA045 UV
3. PU FORM - GENERAL PURPOSE.
4. NATURAL RUBBER FOR SEALING PURPOSE

QUALITY TEST REPORT COMBINING AS PER JSS 0253-01,MIL-STD-810F, ASTM D4169

SL.No.	TEST NAME	TEST SPECIFICATION
1	WATER SPRAY TEST K- JSS 0253-01	WATER SPRAYED AT A PRESSURE OF 2.5Kg/cm^2 FOR ALL THE FOUR TOP CORNERS AT AN ANGLE OF 45° FROM A DISTANCE OF 2.5m. DURATION: 5 MIN.
2	VIBRATION TEST J- JSS 0253-01	THE CASE IS SUBJECTED TO THE FOLLOWING VIBRATION FREQUENCY RANGE: 5 TO 50 cyc/sec. DISPLACEMENT: 0 TO 12.7 mm
3	DRY HEAT TEST C - JSS 0253-01	THE CASE IS EXPOSED TO A TEMPERATURE OF 75°C ± 2°C WITH RELATIVE HUMIDITY OF 40% FOR 48 HOURS
4	LOW TEMPERATURE TEST G - JSS 0253-01	THE CASE IS EXPOSED TO A TEMPERATURE OF -20° ± 5°C WITH RELATIVE HUMIDITY OF 65% FOR 8 HOURS.
5	BUMP TEST (A)JSS 0253-01	200 BUMPS AT 2 TO 4 BUMPS/sec.
6	DROP TEST MIL-STD-810F ASTM D4169	1-10 DROPS FROM A HEIGHT OF 140 cms ON ANY FACE,EDGE&CORNER SIDE OF THE CASES. DROPPING HEIGHT DEPENDING UPON THE PAYLOAD.
7	LIFTING TEST F F - JSS 0253-01	LOAD THE CONTAINER TO THREE TIMES THE GROSS PACKAGING WEIGHT MAINTAINING C.G & ALLOW THE CONTAINER TO HANG FREELY FOR A PERIOD OF FIVE MIN. FROM THE HANDLE
8	STATIC LOAD TEST H JSS 0253-01	THE PACKAGE BASE SHALL STAND ON HARD SURFACE BASE, THE UPPER MOST SURFACE SUBJECTED TO A STAIC LOAD EQUIVALENT TO THAT BY STAKING ON IT. THE MIN. NO. OF SIMILAR PACKAGES REQUIRED TO REACH HEIGHT OF BETWEEN 5.5m TO 5.8m. THE LOAD SHALL BE APPLIED FOR 24 HOURS.

PART NO.	DESCRIPTIONS	NO OFF	MATERIAL SPECIFICATION
9	PAD LOCK	1	SS 202-ASTM E 1086(94)
8	CUSHION (CROSS LINKED POLYTHYLENE)	1	XLPE-ASTMC1777, D 2240, JIS K 6767
7	GASKET	1	NATURAL RUBBER
6	SUITABLE STEEL ROPE	2	SS 202-ASTM E 1086(94)
5	HANDLE	3	SS 202-ASTM E 1086(94)
4	HINGE	3	SS 202-ASTM E 1086(94)
3	LATCH (WIRE LOCK PROVISION)	4	SS 202-ASTM E 1086(94)
2	MOULDED BOX LID (LOW DENSITY POLYETHYLENE)	1	LLDPE - LL 36RA045 UV
1	MOULDED BOX BASE (LOW DENSITY POLYETHYLENE)	1	LLDPE - LL 36RA045 UV

	SIGNATURE & DATE.		
TRACED		SUB: TRANSIT CASE	SCALE NTS
DRAWN		FOR: 40 mm MGL	STORE DRG.NO.
CHECKED		DES.REF.NO.	OPERATION NO.
OIC/D&DO		DRG. No.: TEND: 1937 *	
OFFICER/ PRODN.		ORDNANCE FACTORY TIRUCHIRAPPALLI-16.	SHEETS: 1
OFFICER/ D&DO			SHEET No.: 1

AMENDMENTS | SIG. & DATE | APPROVED ON 09/01/2013

DIMENSIONS ARE IN mm.
UN TOLERTATED DIMENSIONS AS PER IS 2102 (MEDIUM)