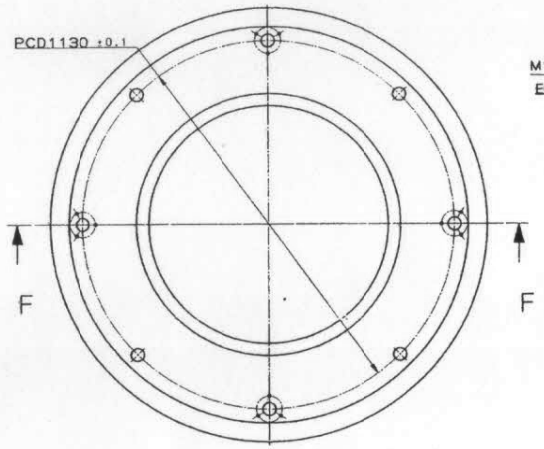

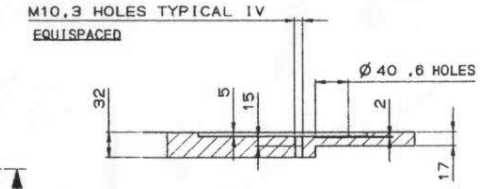

DETAIL G
SCALE 1:4

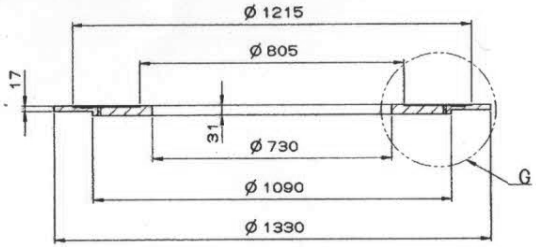

SECTION F-F

ALTERNATE MATERIAL :- EN-8 OR
080M40 BS:970 PART-I 1983

DRAWING NO	NOMENCLATURE	MATERIAL	NO. OFF	SCALE
DW-1108-0211-1	TOP PLATE	40C8, IS:5517	1	1:5

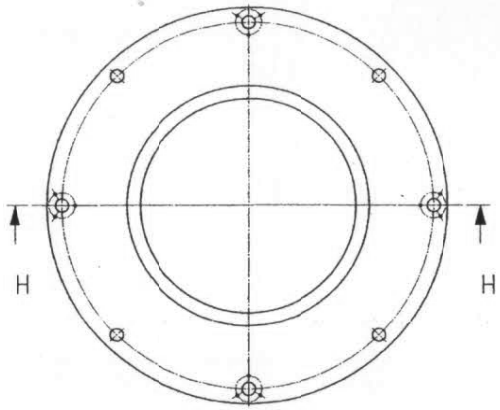

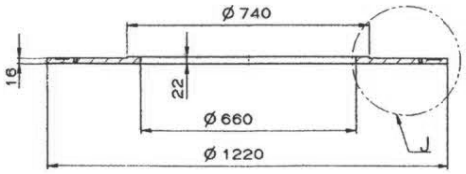

SECTION H-H

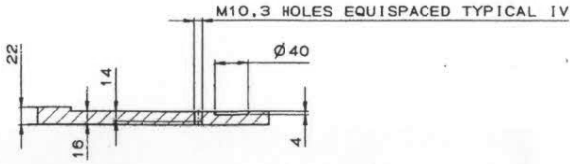

DETAIL J
SCALE 1:4

ALTERNATE MATERIAL :- EN-8 OR
080M40 BS:970 PART-I 1983

DRAWING NO	NOMENCLATURE	MATERIAL	NO. OFF	SCALE
DW-1108-0212-1	BOTTOM PLATE	40C8, IS:5517	1	1:5

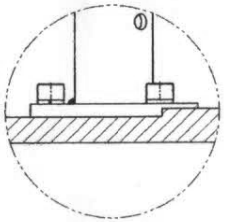

DETAIL L
SCALE 1:2

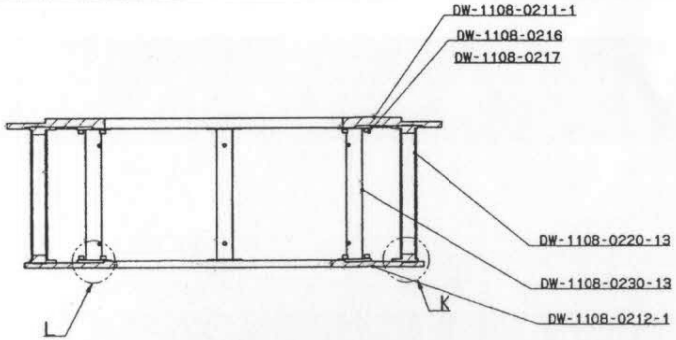

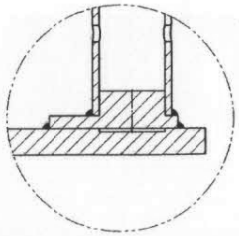

DETAIL K
SCALE 1:2

E-WELDED

1. FIRST DRAWING NO.DW-1108-0211-1.DW-1108-0212-1 AND DW-1108-0230-13 SCREWED TOGETHER
2. DRAWING NO.DW-1108-0211-1.DW-1108-0212-1 AND DW-1108-0220-13 WELDED TOGETHER
3. STRESSES TO BE RELIEVED AFTER WELDING

THE COPYRIGHT OF THESE DRAWINGS AND ATTACHMENTS TO THE INDIAN ORDNANCE FACORIES, MINISTRY OF DEFENCE, GOVT. OF INDIA THEY SHOULD NOT BE COPIED,RE-PRODUCED IN ANY WAY OR THE INFORMATION CONTAINED THEREIN MADE AVAILABLE TO UNAUTHORISED PERSONES WITHOUT THE WRITTEN PERMISSION OF THE DIRECTOR OF ORDNANCE FACTORIES.

NOMINAL SIZE & FIT	DEVIATION

No.OFF	DESCRIPTION	PART No.	MATERIAL	STANDARD	DIMENSIONS	REMARKS
1	FRAME					

GENERAL TOLERANCE

LINEAR DIMENSIONS

0-6	±0.1
6-30	±0.2
30-120	±0.3
120-315	±0.5
315-1000	±0.8
1000-2000	±1.2

ANGULAR DIMENSION

1-10	±1°
10-50	±30'
50-120	±20'
>120	±10'

VALUE IN "um"

~	>25
▽	9-25
▽▽	1.6-9
▽▽▽	0.025-1.6
▽▽▽▽	<0.025

No.OFF	DRG. No. OF ASSOCIATED PART	INDEX	ALTERATION	DATE	NAME

FRAME(WELDING)
FRAME ASSY
LR-MR LAUNCHER
KAVACH MOD-II

SCALE			
1:1	DRAWN	10.12.08	[illegible]
	CHECKED	"	[illegible]
	APPROVED	25.12	[illegible]
REPLACED BY			
REPLACED FOR			

MACHINE TOOL PROTOTYPE FACTORY, AMBERNATH

Design Office

DRAWING No.
DW-1108-0210-42

APPROVED