765-78-835

Демонтажное

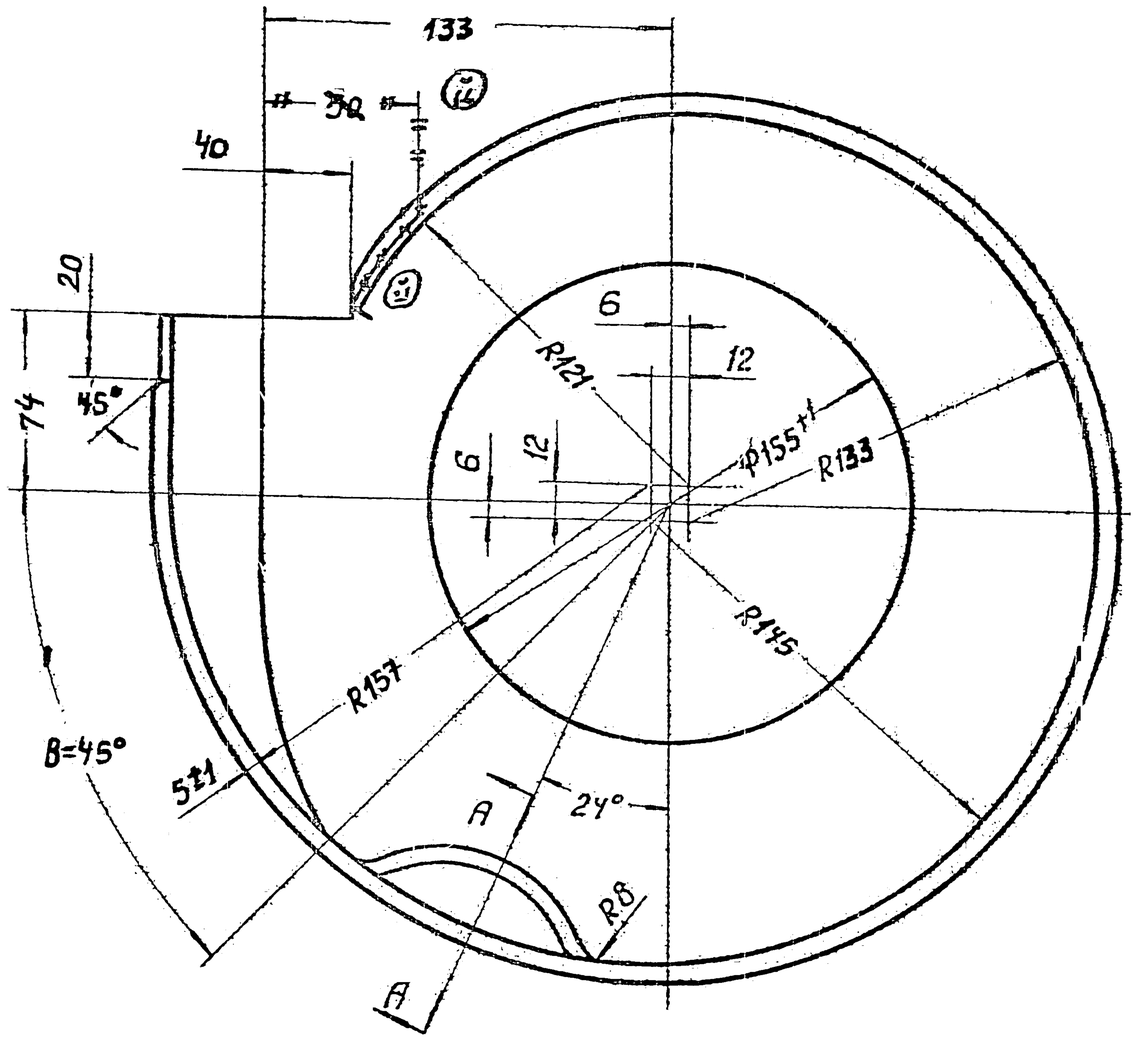

A-A

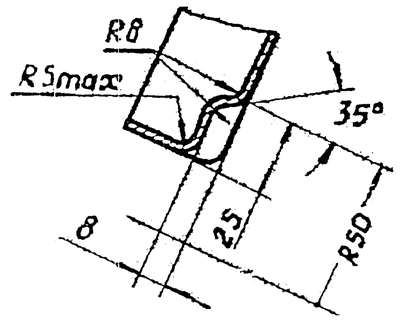

1) Blunt sharp edges.
2) Provide dimensions without deviations with an accuracy of ±0.5 for dimensions upto 80, ±1 for dimensions over 80,
3) Non-flatness of surface Б should not exceed 0.6 mm within the part dimensions,
4) Provide a gradual change from dimension Г to dimension Д on section B at the angle of bending.

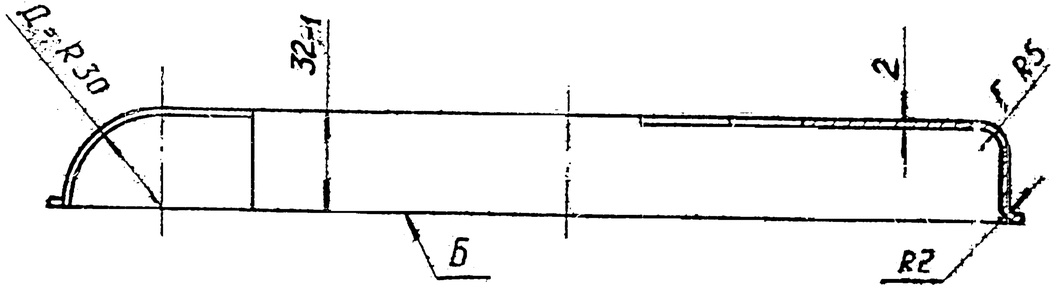

SHEET A Д1M-2 GOST 21631-76

MATERIAL :-		
ALL SHARP EDGES & CORNERS TO BE ROUNDED OFF	ALL THREADS TO CONFORM TO SPECIFICATION	STAMP OR ETCH, PART NO. MANUFACTURERS NAME & YEAR OF MFR.
DRG. NOT TO BE SCALED		
SCALE :- 1:2	TOLERANCE ON DIMENSIONS UNLE-SS OTHERWISE SPECIFIED	USED ON:-
DATE :- 20-06-95		
DRN. SPRaSoy / WT :- (Kg) 0.	SCROLL HALF	
TCD.		
CHD. / APD.	765-78-835	

CONTROLLERATE OF QUALITY ASSURANCE (INFANTRY COMBAT VEHICLES).

Согласов. | Взамен инв. № подл. | Подп. и дата