DRG.NO.- LA/BPV/SML/GLASS/004

ASSEMBLY DRAWING OF

GLASS WITH RUBBER BEADING

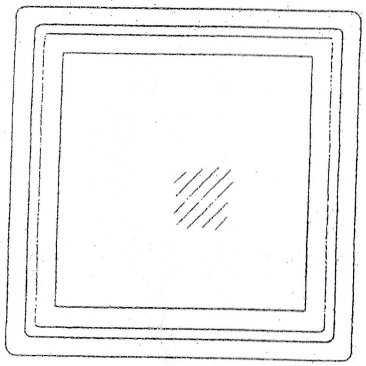

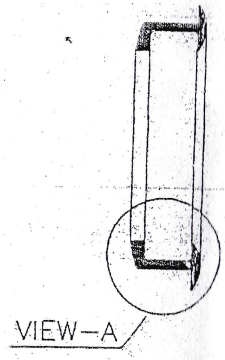

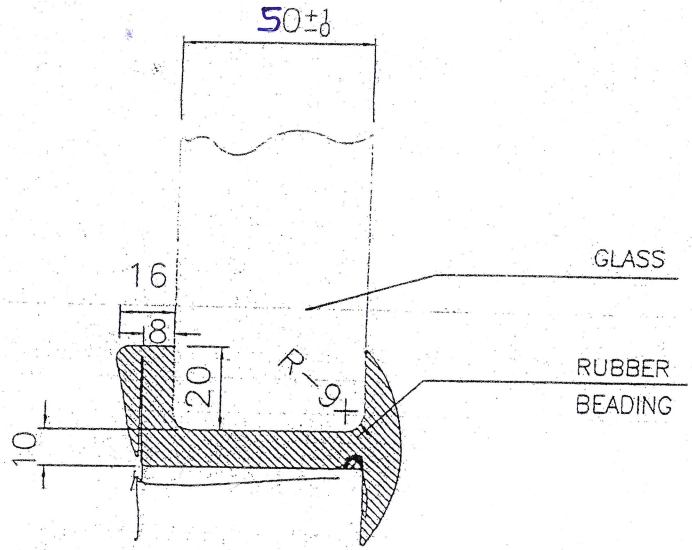

ENLARGED VIEW–A

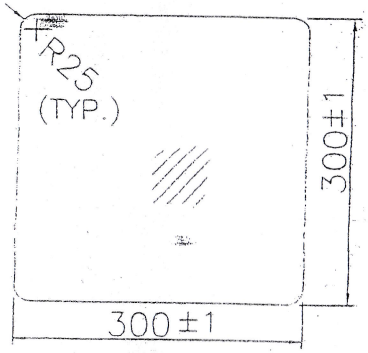

GLASS DRAWING

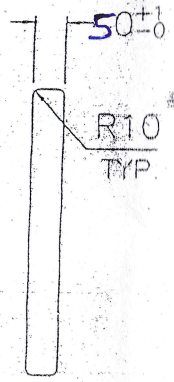

NOTE:

1. ALL DIMENSIONS ARE IN MM.
2. TOLERANCE ON UNSPECIFIED DIMENSIONS ARE ±1 mm.
3. REFER SPECIFICATION NO: VFJ/R&D/LA/SP/BPV/GLASS/SML (1x4) dtd 14/06/19
4. GLASS SHOULD GIVE NIJ LEVEL III PROTECTION AGAINST 7.62 SLR FROM 10 MTRS. DISTANCE.
5. GLASS SHOULD BE SPLINTER PROOF TYPE.
6. GLASS TO BE SUPPLIED WITH MOULDED RUBBER BEADING FITTED WITH THE GLASS.

QUANTITY/VEH. = 02 NO.

ITEM	DESCRIPTION	NO. OFF	MAT.	STD.	SIZE / WT.	REMARKS
					JWM/LA	WM/LA

INDEX	ALTERATION	DATE	SIGN.	DRN. BY	CKD.	APPD.

DIM.	TOL.
0-30	±0.1
30-250	±0.2
250-800	±0.3
800-2000	±0.5
>2000	±0.8
GEN. TOL.	

BULLET PROOF GLASS REAR WITH RUBBER BEADING FOR SML (1x4)

REF DRG. NO.

MACHINE

1:1 SCALE

1/1 SHTS.

V. D. O.

VEHICLE FACTORY JABALPUR

DRG.NO. LA/BPV/SML/GLASS/004