DRG No.	IC	SS	C	AA	A	C	SST
	0 2 0 4	0 3	0 4	0 2	1 4	0 1 9	0 0 D A

GENERAL TOL. : FINE / MEDIUM / COARSE
CLASS TO IS: 2102

DRG. CONVENTIONS CONFIRM TO INDIAN STANDARDS
DIMENSIONS ARE IN mm UNLESS OTHERWISE STATED.

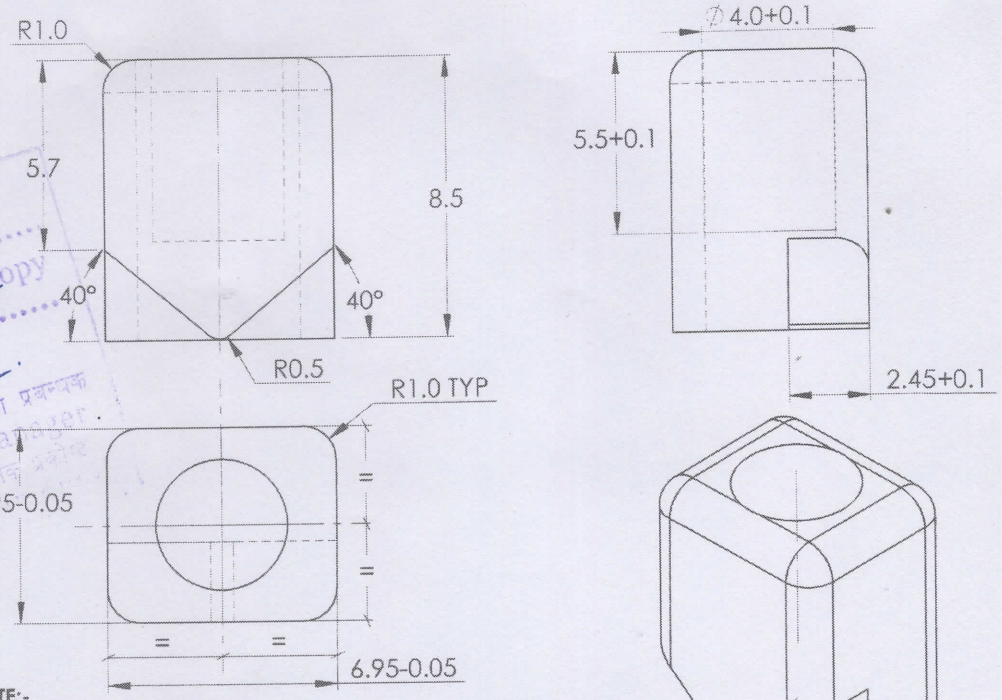

NOTE:-

1) REMOVE ALL ASHARP EDGES AND BURRS.
2) HARDNESS:- 500-650 H.V
3) HEAT TREATMENT:- CASE HARDENED TO A DEPTH OF 0.10 TO 0.30
4) IF THE COMPONENT IS TO BE MANUFACTURED THROUGH MIM ROUTE, REFER ARDE SPECN No: DRDO/ARDE/MIM/TSP/051/2019.
5) ALT. PROTECTIVE COATING: PHOSPHATED TO SPECN. IS:3618-1966, CLASS 'B'

Sr. No.	DATE	AUTHORITY	BRIEF RECORD	ZONE	CD	GO
					SIGN	

DRN: SOURABH
SIGN:
DATE: 07/03/2019
CHECKED

APPD.
DATE: 07/03/2019
FOR DIRECTOR

SEALED
DATE:

SHEET SIZE: A4
SCALE: 5:1
EST. MASS 1.89 gm

DESIGN AUTHORITY
ARDE
PUNE 411021

MATERIAL:
STEEL TO IS:4432-1988 Gd.13Ni13Cr3

PROTECTIVE FINISH:
ELECTROLESS NICKEL-BORON NITRIDE (NiBN) COATING AS PER ARDE SPECN. NO: ARDE/SA/2016/COATING-02

TITLE:
PLUNGER WHEEL LOCK

DRG No.	0 2 0 4	0 3	0 4	0 2	1 4	0 1 9	0 0 D A
	IC	SS	S	AA	A	C	SST

JVPC | PART No. | DS CAT No. | AHSP

Certified as correct copy of drg. on 28/09/22
Jr. Works Manager
कार्यशाला प्रबन्धक