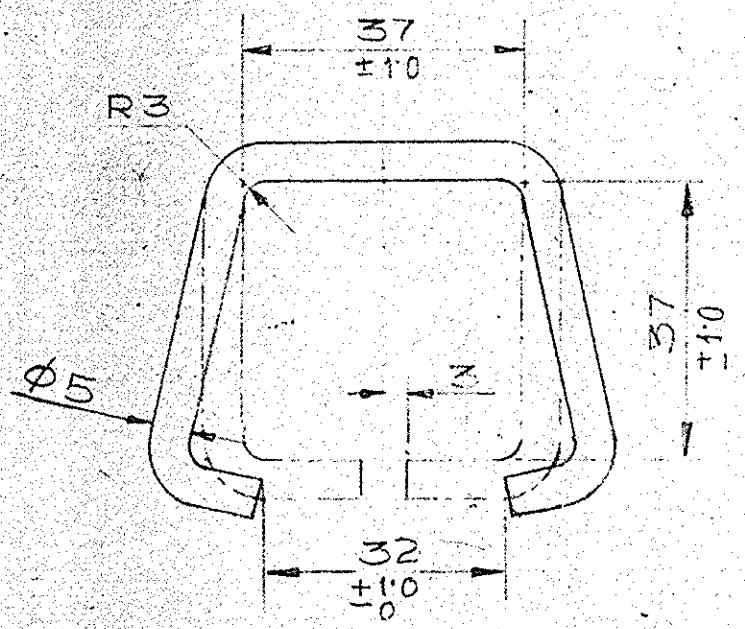

MATERIAL:-

IS: 280 -78 ANNEALED

PROTECTIVE FINISH:-

PHOSPHATE TO SPEC.
JSS 0465-01 [illegible] CLASS II
OIL FINISH.

(51)

2120324-4-SA 91	DRG. SEALED PROVISIONALLY.	LT. COL	
AUTHY DATE ZONE	BRIEF RECORD	SIG	

DRAWING CONVENSIONS CONFORM TO IS: 696 TOLERANCE FOR UNTOLERANCE DIMENSIONS SEE 'MEDIUM' IS:2102	DATE NAME DGN DRN CHD. NKC TRN COMP I/C, D.O. SCALE: 1:1 SEALED:-PROV. DC(1) 21203-SA DT. 24-4-91	ASSY. CQA(SA)-76 MATERIAL: AS STATED DIMENSIONS ARE IN MILLIMETRES LINK FOR LOCK 1-2	CQA(SA) KANPUR APPROVED: LT. COL DT. [illegible] FOR [illegible] DESIGNER'S REF. CQA(SA) 76/4 DS. CAT. NO.