DC/RFI No.	DATE	AMENDMENTS	SIG.
04/011/04	24.02.04	RE-DRAWN WITH METRIC DIMNS. & RE-NUMBERED	
04/010/09	17.10.09	RE-DRAWN & RE-DIMENSIONED. DRG. NO. ADVANCED TO RFI SK.7470*	

RFI SK.7470*

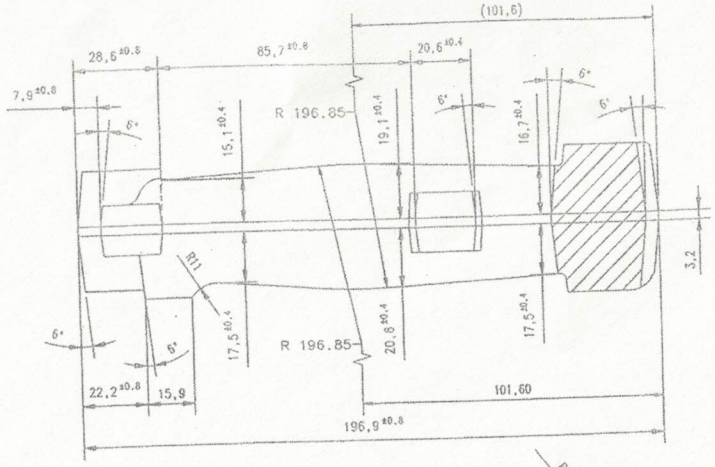

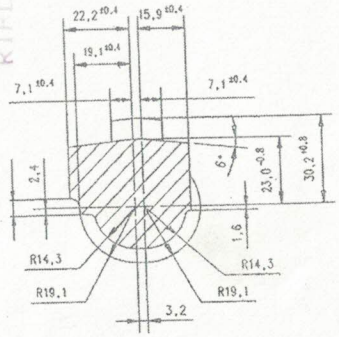

SECTION : A-B

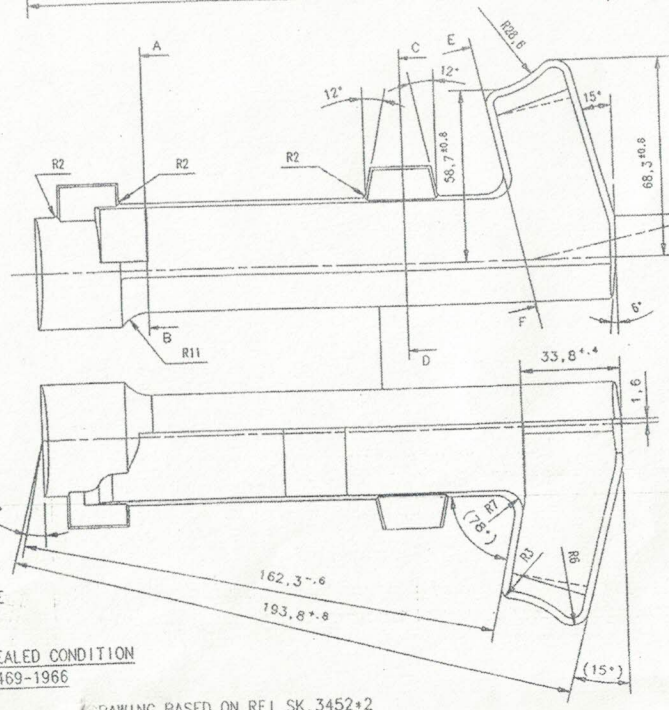

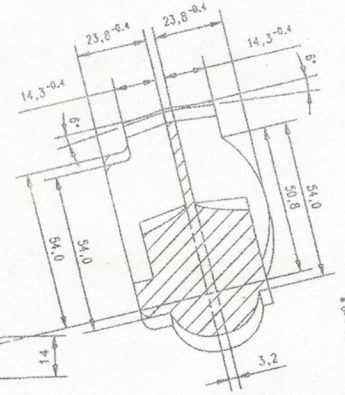

SECTION : E-F

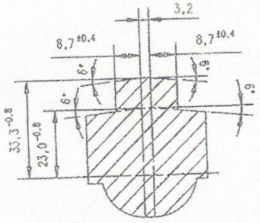

SECTION : C-D

SIZE :- 44.45($1\frac{3}{4}''$)OR 46,0 $^{+0.8}_{-0}$

SQUARE BAR

DRG. PREPARED ON THE BASIS OF
MEMO NO.LC/0.315 SPR/52/09 DT.09-10-2009

TOLERANCE ON DRAFT ANGLE
TO BE MAINTAINED BY ±1°

TE :- FORGING TO BE SUPPLIED AT ANNEALED CONDITION
TOLERANCE TO BE AS PER I.S. 3469-1966
UNLESS OTHERWISE NOTED.

DRAWING BASED ON RFI SK.3452*2

MATL: BS:970 PT.1 1983, Gr.826-M 31, 'T' CONDITION; WITH 150 mm LRS
ALT.MATL. BS:970 EN 21 R

ALL DIMENSIONS ARE IN MILLIMETER
IMPORTANT DIMENSIONS ARE MARKED THUS ●
INFORMATION MARKED THUS ▼ TO BE MARKED ON

TITLE OF	OPERATION		2009	NAME	DATE
FORGING			DGN		
			DRN		17.10.09
ORDNANCE FACTORY BOARD RIFLE FACTORY ISHAPORE		SCALE:- N.T.S	CKD		17.10.09
			APPD		25/10/09

SEEN & O.K.
JWM/LC

0.315" SPORTING RIFLE
BODY (FORGING)

DRG. NO:-
RFI SK.7470*

SHEET NO.1 NO. OFF 1

NAGATIVE

3.7 Kg. (Approx)

RIFLE FACTORY, ISHAPORE

H8/MPM
17-8-5