DRG.No.	IC	SS	S	AA	A	C	SST
	0204	03	02	00	01	010	00DA

GEN TOL FINE/MEDIUM/COARSE CLASS TO IS:2102

DRG CONVENTIONS CONFIRM TO INDIAN STD DIMN IN mm UNLESS OTHERWISE STATED

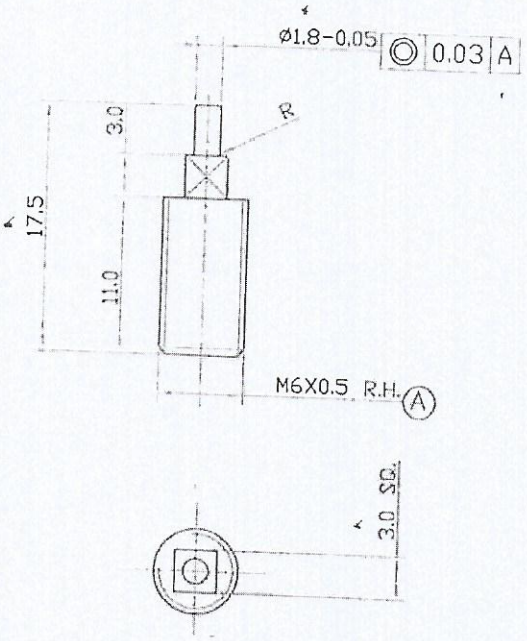

आरेखण की सत्य प्रतिलिपि
प्रतिलिपि
Certified as correct copy
of drg. on
कार्यशाला प्रबन्धक
Jr. Works Manager
मानक प्रकोष्ठ
STANDARD CELL

CONTROL COPY No. 1

NOTE : 1) REMOVE ALL SHARP EDGES AND BURRS
2) HARDNESS : 300–330 H.V
3) ALT. MATERIAL: MIM S7 (AISI S7 EQUIVQLENT)
HARDNESS : 500–600 HV

Received on 29/11/15

S No	DATE	AUTHORITY	BRIEF RECORD	ZONE	CD	GO
					SIGN	

DRN PGG CHD

APPD DATE 25/11/2015 For Director

SEALED DATE

SCALE 2:1 EST MASS

MATERIAL : STEEL TO IS: 5517–1993, Gd–42Cr4Mo2 (En–19)

PROTECTIVE FINISH : PHOSPHATED TO SPECN. IS:3618–1966, CLASS 'B'

TITLE

FORE SIGHT

DESIGN AUTHORITY
ARDE
PUNE 411021

DRG.No. 0204 (IC) 03 (SS) 02 (S) 00 (AA) 01 (A) 010 (C) 00DA (SST)

PART No DS CAT No AHSP