DRG No. 0 2 0 4 | 0 3 | 0 4 | 0 0 | 0 1 | 0 0 5 | 0 0 D A
IC | SS | S | AA | A | C | SST

GENERAL TOL. : FINE / MEDIUM / COARSE
CLASS TO IS: 2102

DRG. CONVENTIONS CONFIRM TO INDAN STANDARDS
DIMENSIONS ARE IN mm UNLESS OTHERWISE STATED.

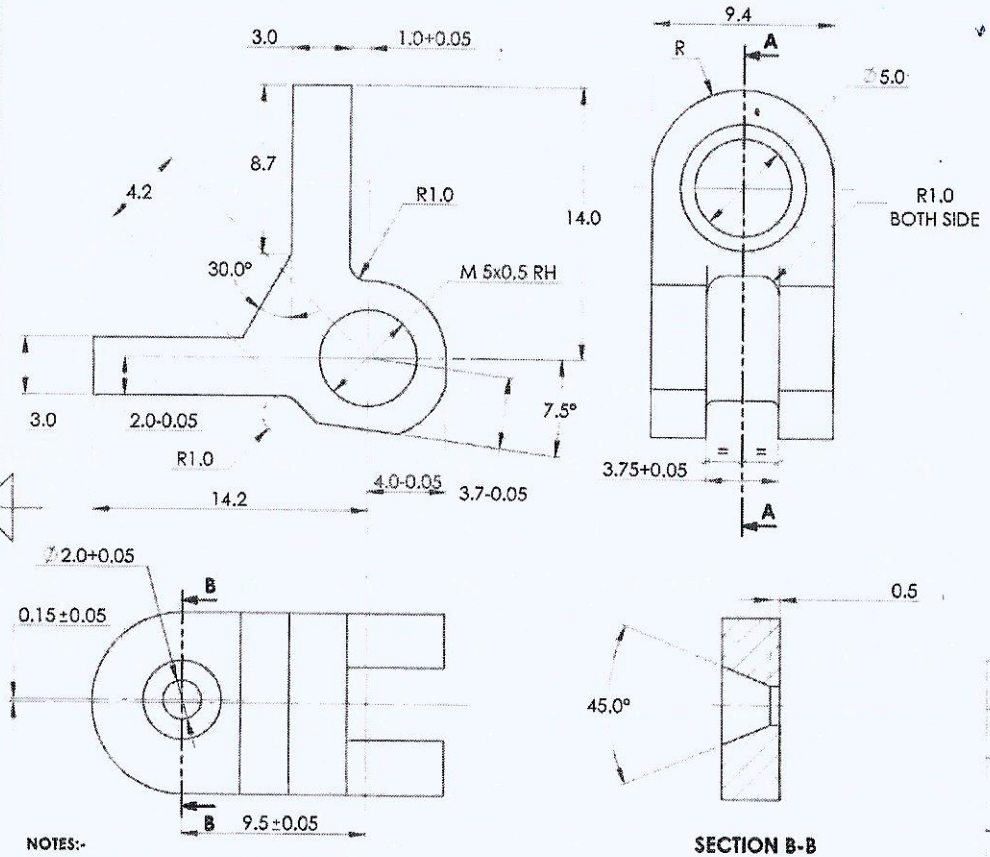

SECTION B-B

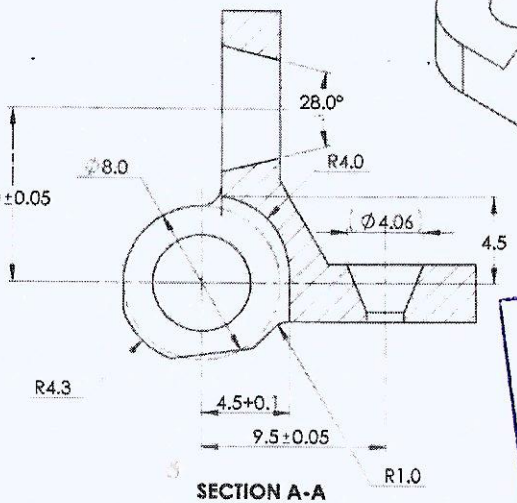

SECTION A-A

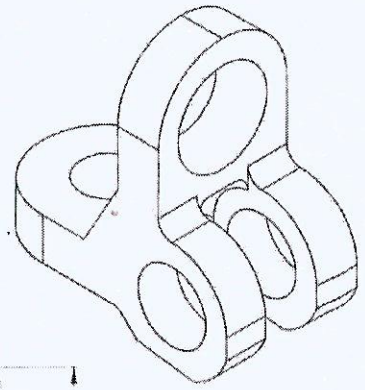

NOTES:-

1) REMOVE ALL SHARP EDGES AND BURR.
2) TOL. FOR ANGLES ±30' UNLESS OTHERWISE STATED.
3) DIMENSIONS ARE TO BE READ AS APPLIED AFTER PROTECTIVE FINISH.
4) HARDNESS:- 260-310 HV.
5) IF THE COMPONENT IS TO BE MANUFACTURED THROUGH MIM ROUTE. REFER ARDE SPECN No.DRDO/ARDE/MIM/TSP/051/2019.
6) ALT. PROTECTIVE COATING: ELECTROLESS NICKEL-BORON NITRIDE (NiBN) COATING AS PER ARDE SPECN. NO: ARDE/SA/2016/COATING-02
7) SURFACE FINISH ▽▽ UNLESS OTHERWISE SPECIFIED.

CONTROLLED COPY No.: 03

Sr. No.	DATE	AUTHORITY	BRIEF RECORD	ZONE	CD	GO
					SIGN	

DRN: SOURABH
SIGN:
DATE: 07/03/2019 — CHECKED

MATERIAL:
STEEL TO IS:5517-1993, Gd-55C8

APPD.
DATE: 07/03/2019 — FOR DIRECTOR

PROTECTIVE FINISH:
PHOSPHATED TQSPECN. IS: 3618-1966, CLASS 'B'

SEALED
DATE:

SHEET SIZE: A3 — EST. MASS
SCALE: 4:1 — 4.98 gm

TITLE:
REAR SIGHT

DESIGN AUTHORITY
ARDE
PUNE 411021

DRG No. 0 2 0 4 | 0 3 | 0 4 | 0 0 | 0 1 | 0 0 5 | 0 0 D A
IC | SS | S | AA | A | C | SST

JVPC — PART No. — DS CAT No. — AHSP

आरेखण की सही प्रमाणित
प्रतिलिपि दिनांक .....
Certified as correct copy
of drg. on 20.08.2020
क. कार्यशाला प्रबन्धक
Jr. Works Manager
मानक प्रकोष्ठ
STANDARD CELL