GENERAL TOLERANCE AS PER IS:2102, MEDIUM CLASS

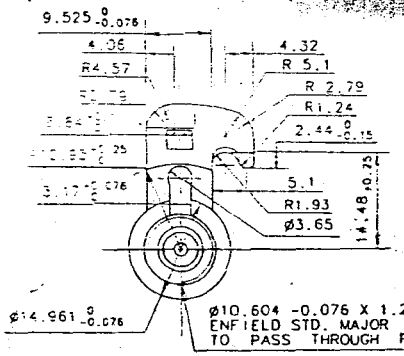

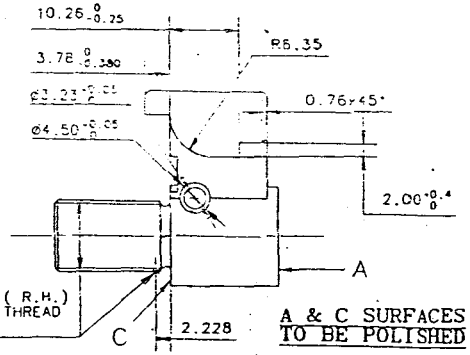

A & C SURFACES TO BE POLISHED

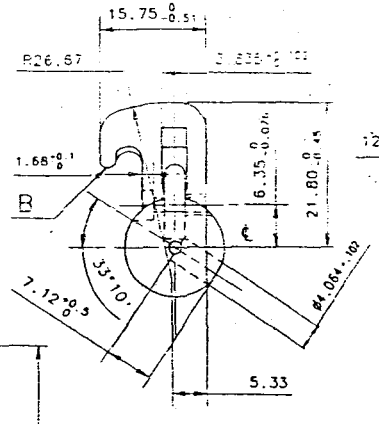

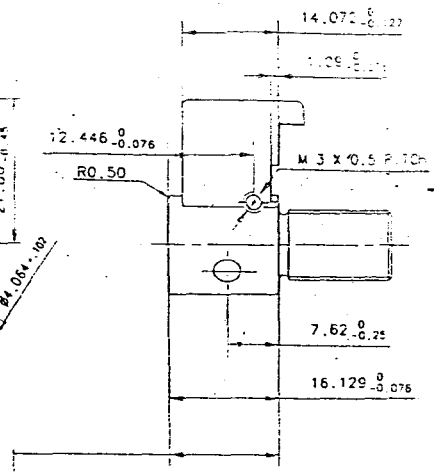

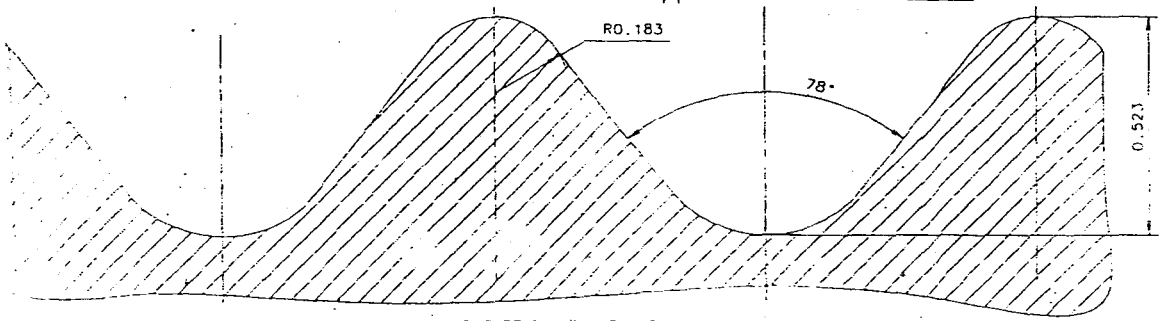

ENLARGED FORM OF ENFIELD STD.THREAD . SCALE:- 5:1

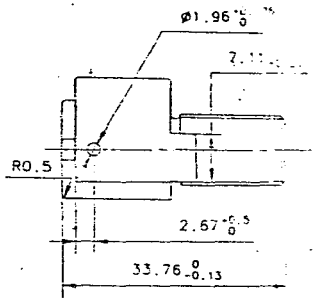

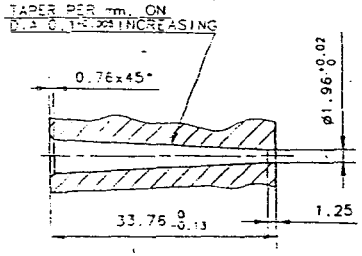

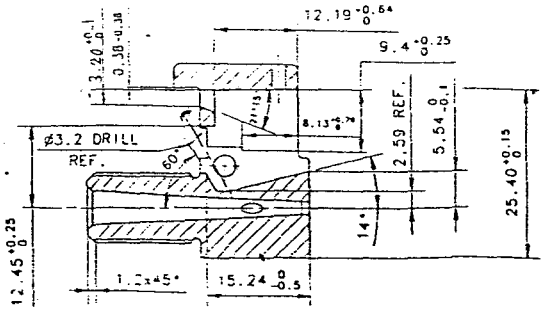

NOTE:- IN CASE OF SPARE ISSUE DWN. BETWEEN FRONT FACE & SHOULDER.

1. 16.129 -0.076 WILL READ 16.255 -0.076 & THE BOLT HEAD WILL BE MARKED "S"
2. 16.129 -0.076 WILL READ 16.332 -0.076 THE BOLT HEAD WILL BE MARKED "SS" IN 2 mm POSITION INDICATED THUS " "
3. ALL SHARP EDGES TO BE REMOVED

प्रमाणित प्रति / CERTIFIED COPY OF
ड्राइंग / लेआउट / गेज शिडयूल HB/MPM
DRG/LAYOUT/GAUGE SCHEDULE
दिनांक / AT THIS DATE 16.08.17
सी डी डी / CDD
राइफल फैक्टरी, ईशापुर
RIFLE FACTORY, ISHAPORE

MATL BS 970 Pt.1.1983 GR 655 M-13 OR IS 4432, 1998 DESIGNATION 13 Ni-13Cr 3 GR1		ALL DIMENSIONS ARE IN MILLI METRE. IMPORTANT DIMENSIONS MARKED THUS ... INFORMATION MARKED THUS ... TO BE MARKED ON	
TITLE OF	OPERATION	2005	NAME DATE
		DESIGNED	
		DRAWN	
ORDNANCE FACTORY BOARD RIFLE FACTORY ISHAPORE	SCALE :- 1:1	CHECKED	
		APPROVED	
.315" SPORTING RIFLE HEAD BREECH BOLT (SP18) UP TO STAGE -XIV		DRG NO:- RFI.SK.-7848	
		SHEET 1 OF 1	