THIRD ANGLE PROJECTION. DIMENSIONS ARE IN MM.

GENERAL TOLERANCE AS PER IS : 2102 - 1962 MEDIUM CLASS

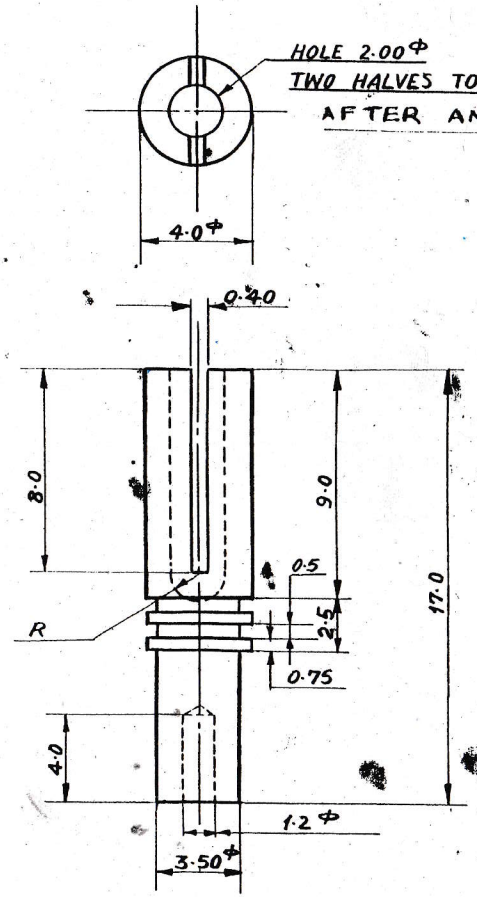

25 ALL OVER FINISH:- CLEAN

1	TERMINAL	1	BRASS TO IS 319	
ITEM NO.	DESCRIPTION	NO. OFF.	MATERIAL	REMARKS

B	ADDED AFTER ANNEALING	16.8.90	D.G.M.-PM
A	GEN. TOLERANCE ADDED	10.3.87	
	AMENDMENTS	DATE	SIG.

6/10/75
FOR GENERAL MANAGER, O.C.F.

SH. KARNAIL SINGH. 3-2-72.		3-10-75	6/10/75
TRACED.	RETRACED.	CHECKED.	F'D.O/Q.A.
5:1.		27-9-75.	
SCALE		DATE	

TERMINAL

GROUP:-

DRG.NO. O.C.F. SK.566-B

SHEET NO. 4/4.