DRG. NO. :- CO- 519

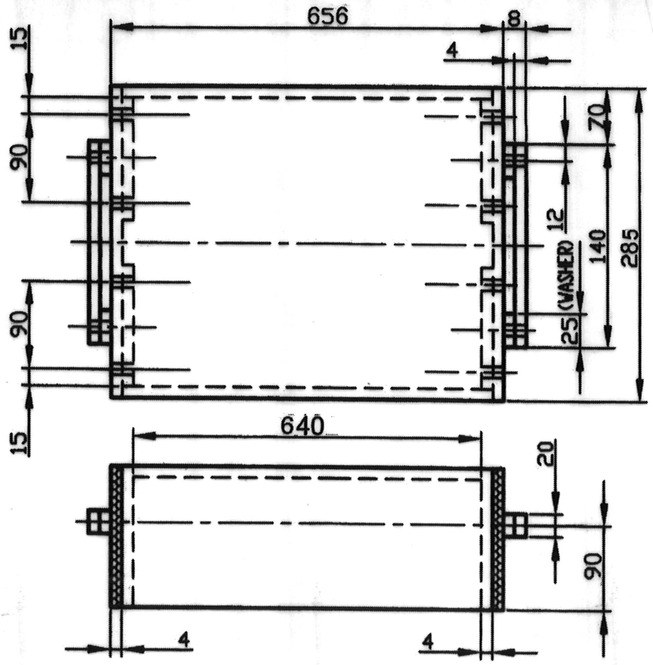

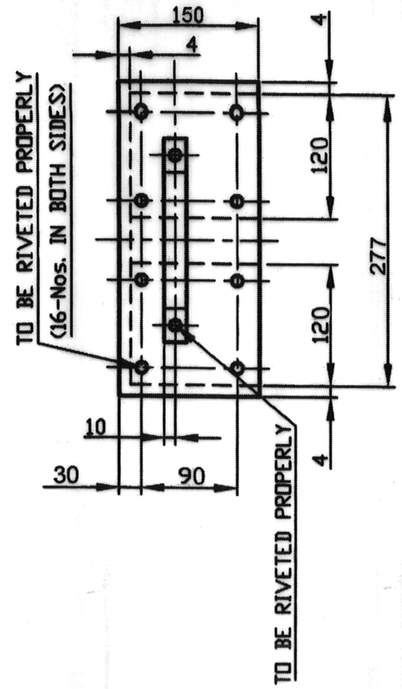

BOX (TOP/LID)

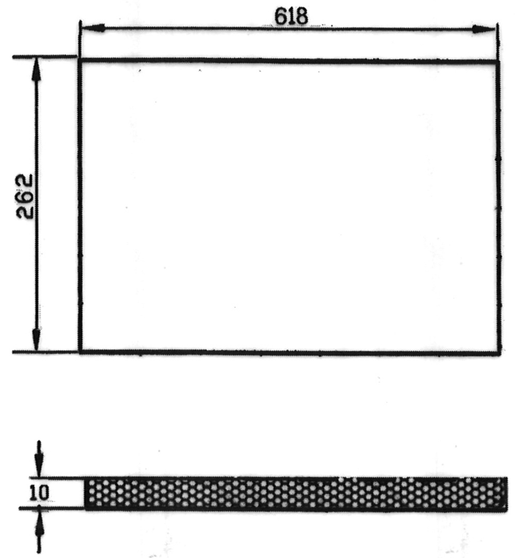

BASE SUPPORT

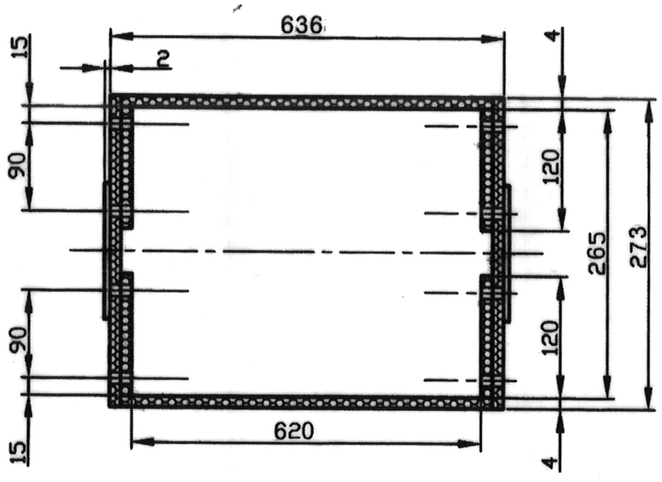

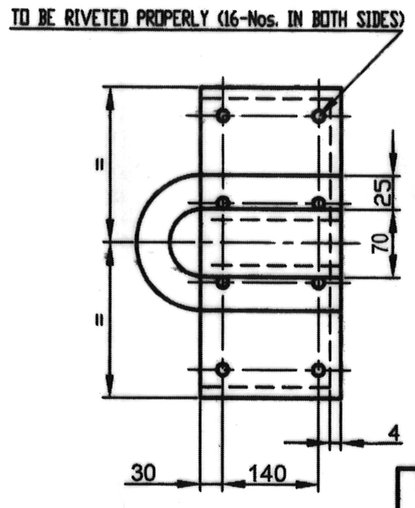

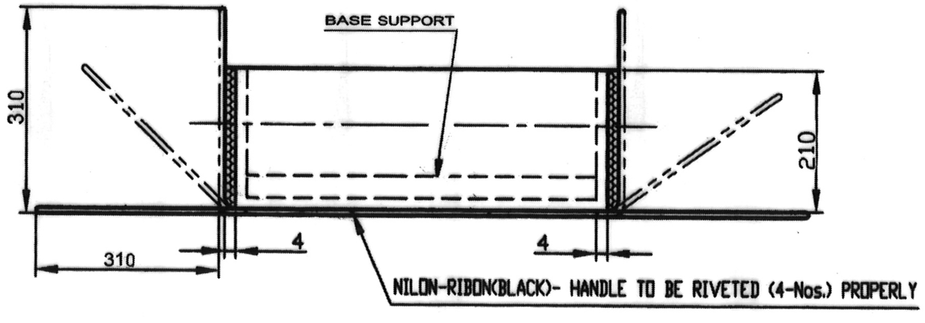

BOX (BOTTOM)

MATL.:-

FOR BOX (TOP/LID & BOTTOM) :- HIGH IMPACT CO-POLYMER OF POLYPROPYLENE CORRUGATED SHEET OF 4m.m. THICKNESS & DENSITY OF 900-1100 GSM. IN BLUE COLOUR.

FOR BASE SUPPORT :- EXPANDED P.E. FOAM WITH DENSITY OF 20-35 Kg/m^3 HAVING TENSILE STRENGTH OF 1.5-3.5 Kg/cm^2 (TRANSVERS DIRECTION), 2.5-5.0 Kg/cm^2 (MACHINE DIRECTION) AS PER IS:7888

GUIDE TO SUPPLY ONLY

COMPT.:- PISTOL (0.32")	STORE DRG. No.-
PACKING BOX (FOR 10 NOS. PISTOL CABINETS)	
DRG. NO. :- CO- 519	
M / C :	No. of SHTS.- 1
G. & S. FY. COSSIPORE	SHT. No.-- 1

SCHEDULE NO :	
SCALE:-N.T.S.	PROJECTION THIRD ANGLE
DRAWN BY : S. Halder 30/6	
CHECKED BY :	
APPROVED BY : 30.06.16	
CONCURRED BY : JWM/MKTG.	
SIGN HOS/Mktg.	DATE 30/06/16

DT.	SIG.	DESCRIPTION
AMENDMENTS		