306-46-10

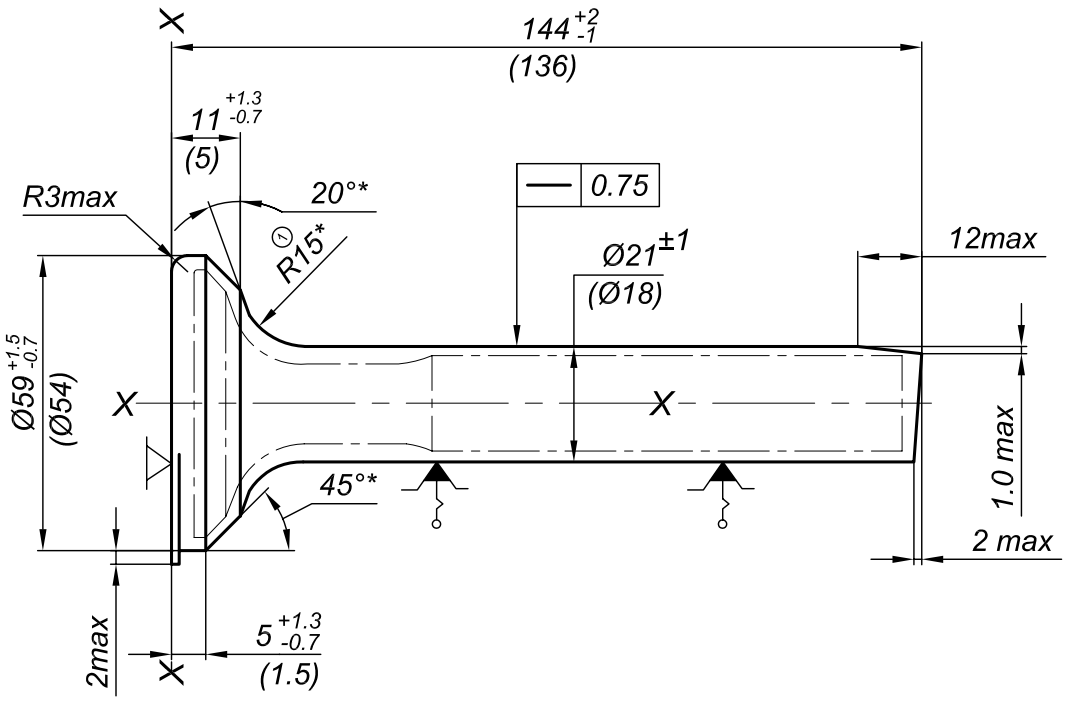

1.Forging is machined as per GOST 7505-89.
1.1 Class of accuracy M3.
1.2 Steel grade C3.
1.3 Degree of Complexity T4.
1.4 Die parting surface is flat.
1.5 Initial Index - 12.

2. Shift of die parting surface should not be more than 0.5mm.

3. Burrs about die parting surface should not be bigger than 1.4mm by height .

4. Local surface defects upto a depth of not more than 0.5 of the actual allowance is permitted.

5. 255...302HB ($\Phi_{imprint}$ 3.8...3.5 mm) Гр II GOST 8479-70.

6.* - Dimensions are ensured by tool.

					306-46-10		
MOD.	SHEET	DOC.NO.	SIGN.	DATE	FORGING (INLET VALVE)	CAST	WEIGHT	SCALE
DRAWN By.								1:1
CHECKED By								
T. INSPECTION						SHEET	SHEETS	1
N. INSPECTION					Steel 40X10C2M TY14-1-3092-81.		
APPROVED By							
					ENGINE FACTORY AVADI	F-11	