2A42 06 035

(2) View Б
(3) 4 points
(4) View A
(5) 4 points
(6) Hardness test point
(7) 4 points

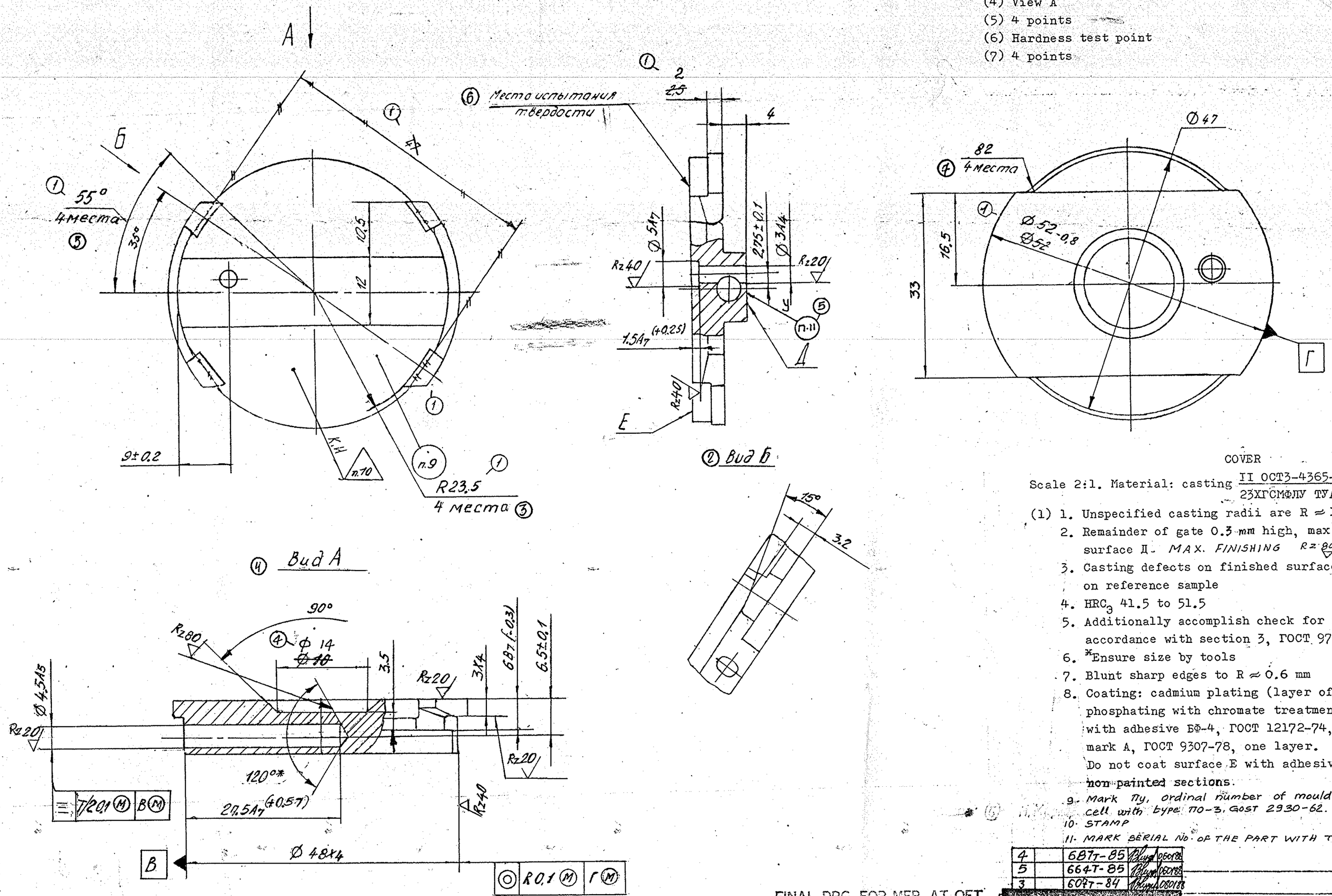

COVER

Scale 2:1. Material: casting II ОСТ3-4365-79 / 23ХГСМФЛУ ТУАДИ116-78. Mass: 0.1

(1) 1. Unspecified casting radii are R ≈ 1.6 mm
2. Remainder of gate 0.3 mm high, max., is permissible on surface Д. MAX. FINISHING Rz 80 — (3)
3. Casting defects on finished surfaces are PERMISSIBLE as on reference sample
4. HRC_3 41.5 to 51.5
5. Additionally accomplish check for impact strength in accordance with section 3, ГОСТ 977-75
6. *Ensure size by tools
7. Blunt sharp edges to R ≈ 0.6 mm
8. Coating: cadmium plating (layer of 3 μ); accelerated phosphating with chromate treatment and impregnation with adhesive БФ-4, ГОСТ 12172-74, and nigrizine, mark A, ГОСТ 9307-78, one layer.
Do not coat surface E with adhesive and nigrizine. Oil non painted sections.
9. Mark Пу, ordinal number of mould, number of mould cell with type ПО-3, GOST 2930-62.
10. STAMP
11. MARK SERIAL No. OF THE PART WITH TYPE ПО-3, GOST 2930-62

4		687т-85		060188
5		664т-85		060188
3		607т-84		080188

FINAL DRG. FOR MFR. AT OFT
DATE 09-07-91
UP-DATED
CHECKED
F/M—PROJ.
SCT—COPY VERIFIED: 14.08.91
DGM/PROJ. 26/8/91

2A42

~~2A42 06 036~~ 2A42 06 035

	Лит.	Масса	Масштаб
Крышка	0	0,1	2:1

II ОСТ3-4365-79
23ХГСМФЛУ ТУАДИ116-78