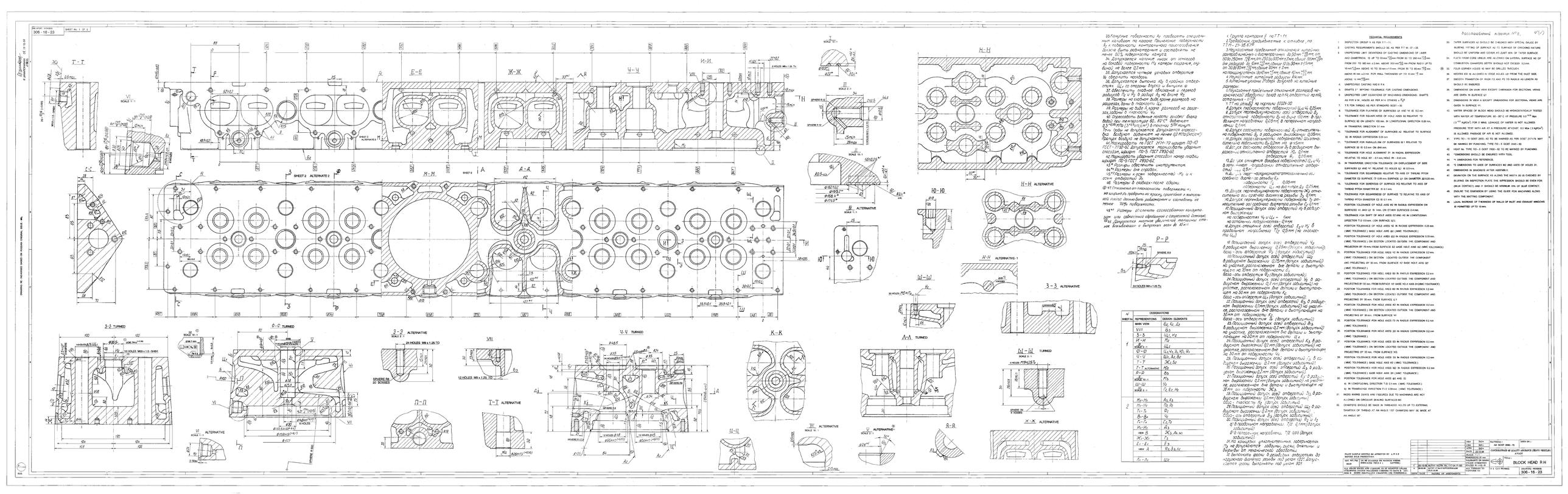
BLOCK HEAD
306-16-23
SHEET No. 1 OF 3
T-T
E-E
Ж-Ж
И-И
Ц-Ц
Н-Н
М-М
А-А
Ф-Ф
Ю-Ю
Ш-Ш
Щ-Щ
Р-Р
3-3
3-3 TURNED
6-6 TURNED
Ч-Ч TURNED
К-К
Л-Л TURNED
Ы-Ы TURNED
Я-Я
Х-Х ALTERNATIVE
Н-Н ALTERNATIVE
Н-Н ALTERNATIVE-1
3-3 ALTERNATIVE
Т-Т ALTERNATIVE
П-П
Э-Э ALTERNATIVE
Щ ALTERNATIVE
Ц-Ц ALTERNATIVE
24 HOLES M8 x 1.25 TO
12 HOLES M8 x 1.25 TO
SPHERE R8
30 BOSSES
TECHNICAL REQUIREMENTS
1. INSPECTION GROUP II AS PER T.T-11.
2. CASTING REQUIREMENTS SHOULD BE AS PER T.T-16-23.
3. UNSPECIFIED LIMIT DEVIATIONS OF CASTING DIMENSIONS OF LIMIT AND GEOMETRICAL: IS UP TO 50mm +1.0 FROM 50 TO 120mm +1.5 FROM 120 TO 500mm +2.0mm. ABOVE 500mm +3.0 FROM 500 UP TO 1000mm +4.0mm ABOVE 1000 TO 3000mm +5.0mm FROM 3000 TO 6000mm +7.0mm
4. UNSPECIFIED MACHINING DEPTHS: 1mm
5. DRAFTS 3° BEYOND TOLERANCE FOR CASTING DIMENSIONS.
6. UNSPECIFIED LIMIT DEVIATIONS OF MACHINING DIMENSIONS: SHAFTS AS H9 x 14, HOLES AS H9 A14 OTHERS ± IT
7. T.T. FOR THREAD AS PER STANDARD 8202-1-36.
8. TOLERANCE FOR FLATNESS OF SURFACES I AND VI IS 0.2 mm
9. TOLERANCE FOR SQUARITY OF HOLE AXIS AS RELATIVE TO SURFACE 50 ON LENGTH 100 mm. IN LONGITUDINAL DIRECTION 0.08 mm, IN TRANSVERSE DIRECTION 0.5 mm
10. TOLERANCE FOR ALIGNMENT OF SURFACES A2 RELATIVE TO SURFACE 50 IN RADIUS EXPRESSION 0.06 mm
11. TOLERANCE FOR PARALLELISM OF SURFACES 68.1 RELATIVE TO SURFACE 50 IS 0.3 mm ON 200 mm.
12. TOLERANCE FOR HOLE ALIGNMENT IN 3H RADIUS EXPRESSION RELATIVE TO HOLE 101 – 0.5 mm HOLE 111 – 0.02 mm
13. IN TRANSVERSE DIRECTION TOLERANCE ON DISPLACEMENT OF SIDE SURFACES 62 AND 111 RELATIVE TO HOLES 62 IS 0.5 mm.
14. TOLERANCE FOR SQUARENESS RELATIVE TO AXIS OF THREAD PITCH DIAMETER 63 SURFACE 73 0.08 mm. SURFACE 62 ON DIAMETER 22 0.25 mm.
15. TOLERANCE FOR SQUARENESS OF SURFACE 62 RELATIVE TO AXIS OF THREAD PITCH DIAMETER 32 0.1 mm.
16. TOLERANCE FOR SQUARENESS OF SURFACE 72 RELATIVE TO AXIS OF THREAD PITCH DIAMETER 62 0.1 mm.
17. POSITION TOLERANCE OF HOLE AXIS 92 IN RADIUS EXPRESSION ON SURFACE 101 AND 52 IS 1mm. ON OTHER SURFACES 0.4 mm.
18. TOLERANCE FOR SHIFT OF HOLE AXIS 83 AND 101 IN LONGITUDINAL DIRECTION T.D 0.5 mm. (ON SURFACE 52)
19. POSITION TOLERANCE OF HOLE AXIS 16 IN RADIUS EXPRESSION 0.25 mm. (MAC TOLERANCE) BASE HOLE AXIS 62 (MAC TOLERANCE)
20. POSITION TOLERANCE OF HOLE AXIS 62 IN RADIUS EXPRESSION 0.15 mm. (MAC TOLERANCE) (IN SECTION LOCATED OUTSIDE THE COMPONENT AND PROJECTED BY 15 mm FROM SURFACE 62 BASE HOLE AXIS 62 (MAC TOLERANCE)
21. POSITION TOLERANCE FOR HOLE AXIS 92 IN RADIUS EXPRESSION 0.2 mm. (MAC TOLERANCE) (IN SECTION LOCATED OUTSIDE THE COMPONENT AND PROJECTED BY 30 mm. FROM SURFACE 101 BASE HOLE AXIS 92 (MAC TOLERANCE)
22. POSITION TOLERANCE FOR HOLE AXIS 83 IN RADIUS EXPRESSION 0.2 mm. (MAC TOLERANCE)
23. POSITION TOLERANCE FOR HOLE AXIS 23 IN RADIUS EXPRESSION 0.2 mm. (MAC TOLERANCE)
24. POSITION TOLERANCE FOR HOLE AXIS 23 IN RADIUS EXPRESSION 0.2 mm. (MAC TOLERANCE)
25. POSITION TOLERANCE FOR HOLE AXIS 73 IN RADIUS EXPRESSION 0.2 mm. (MAC TOLERANCE)
26. POSITION TOLERANCE FOR HOLE AXIS 23 IN RADIUS EXPRESSION 0.2 mm. (MAC TOLERANCE)
27. POSITION TOLERANCE FOR HOLE AXIS 83 IN RADIUS EXPRESSION 0.2 mm. (MAC TOLERANCE)
28. POSITION TOLERANCE FOR HOLE AXIS 83 IN RADIUS EXPRESSION 0.2 mm. (MAC TOLERANCE)
29. POSITION TOLERANCE FOR HOLE AXIS 23 IN RADIUS EXPRESSION 0.2 mm. (MAC TOLERANCE)
30. POSITION TOLERANCE FOR HOLE AXIS 23 IN RADIUS EXPRESSION 0.2 mm. (MAC TOLERANCE) (IN SECTION LOCATED OUTSIDE THE COMPONENT AND PROJECTED BY 30 mm. FROM SURFACE 92)
31. POSITION TOLERANCE FOR HOLE AXIS 23 IN RADIUS EXPRESSION 0.2 mm. (MAC TOLERANCE) (IN SECTION LOCATED OUTSIDE THE COMPONENT AND PROJECTED BY 30 mm. FROM SURFACE 92)
32. POSITION TOLERANCE FOR HOLE AXIS 23 IN RADIUS EXPRESSION 0.2 mm. (MAC TOLERANCE) BASE HOLE AXIS 62 (MAC TOLERANCE)
33. POSITION TOLERANCE FOR HOLE AXIS 92 IN RADIUS EXPRESSION 0.2 mm. IN LONGITUDINAL DIRECTION T.D 0.8 mm. (MAC TOLERANCE)
34. POSITION TOLERANCE FOR HOLE AXIS 62 AND 92 IN LONGITUDINAL DIRECTION T.D 2.5 mm. (MAC TOLERANCE)
35. WORK MARKS DENTS AND FIGURES DUE TO MACHINING ARE NOT ALLOWED ON CIRCULAR SHAPED SURFACES 62
36. CHAMFERS SHOULD BE MADE IN THREADED HOLES UP TO EXTERNAL DIAMETER OF THREAD AT AN ANGLE 120° CHAMFERS 8MM BE MADE AT AN ANGLE 90°
37. TAPER SURFACES 62 SHOULD BE CHECKED WITH SPECIAL GAUGE BY BLUEING FITTING OF SURFACE A2 TO SURFACE OF CHECKING FIXTURE SHOULD BE UNIFORM AND COVER AT LEAST 80% OF TAPER SURFACE
38. FLATS FROM CORE GRILLS ARE ALLOWED ON LATERAL SURFACE 62 OF COMBUSTION CHAMBERS DEPTH SHOULD NOT EXCEED 0.2 mm.
39. FOUR CORNER HOLES 101 MAY BE DRILLED THROUGH.
40. NECKS 62 IS ALLOWED TO ENDS HOLES 120 FROM THE INLET SIDE.
41. SMOOTH TRANSITION OF RADII F2 AND F3 TO RADIUS A3 LENGTH 80 SHOULD BE ENSURED
42. DIMENSIONS ON SHAR VIEW EXCEPT DIMENSION FOR SECTIONAL VIEWS ARE GIVEN IN SURFACE 101
43. DIMENSIONS IN VIEW A EXCEPT DIMENSIONS FOR SECTIONAL VIEWS ARE GIVEN IN SURFACE 101
44. WATER SPACES OF BLOCK HEAD SHOULD BE HYDROSTATICALY TESTED WITH WATER AT TEMPERATURE 85–90° C AT PRESSURE 5.5 10^{5N} Mpa ($5.5\ N/m^2$ kgf/cm²) FOR 5 MINS. LEAKAGE OF WATER IS NOT ALLOWED. PRESSURE TEST WITH AIR AT A PRESSURE AT 0.7 10^{5} 0.2 Mpa ($0.7\ kgf/cm^2$) IS ALLOWED. PASSAGE OF AIR IS NOT ALLOWED.
45. TYPE 110–10 GOST 2789–82 TO BE MARKED AS PER GOST 2789-73 MAY BE MARKED BY PUNCHING. TYPE 110–5 GOST 2789–82 TO BE MARKED BY PUNCHING.
46. HEAT NO. TYPE 110–5 GOST 2789–82 TO BE MARKED BY PUNCHING.
47. *DIMENSIONS SHOULD BE ENSURED WITH TOOL.
48. ** DIMENSIONS FOR REFERENCE.
49. *2 DIMENSIONS TO AXIS OF SURFACE 62 AND AXIS OF HOLES 31.
50. DIMENSIONS IN BRACKETS AFTER ASSEMBLY.
51. DEVIATION ON THE SURFACE 16 ALONG THE WIDTH 80 IS CHECKED BY BLUEING ON INSPECTION PLATE THE IMPRESSION SHOULD BE EVEN FOR (MUST CONTACT) AND IT SHOULD BE MINIMUM 70% OF BLUE CONTACT.
52. ENSURE THE DIMENSION BY USING THE GUIDE FOR MACHINING ALONG WITH THE MATTING COMPONENT
53. LOCAL INCREASE OF THICKNESS OF WALLS OF INLET AND EXHAUST MANIFOLDS IS PERMITTED UP TO 10 mm.
Рассчитанный экземпляр №2
DESIGNATIONS
N SHEET No
REPRESENTIONS
DESIGN ELEMENTS
MAIN VIEW
VIII
3-3
И-И
Ж-Ж
Т-Т
Т-Т ALTERNATIVE
Р-Р
Ю-Ю
Ш-Ш
Щ-Щ
Н-Н
Н1-Н1
Т1-Т1
Ф-Ф
Г1-Г1
Н2-Н2
Н3-Н3
Э-Э
Ж1-Ж1
Е1-Е1
Ц-Ц
Г2-Г2
Г3-Г3
Ч-Ч
Ц1-Ц1
Ы-Ы
Я-Я
Х-Х
Щ
Ш
Ш1
Ш2
Ш3
Ш4
Ш5
Ш6
Ш7
Ш8
Ш9
Ш10
Ш11
Ш12
Ш13
Ш14
Ш15
Ш16
Ш17
Ш18
Ш19
Ш20
Ш21
Ш22
Ш23
Ш24
Ш25
Ш26
Ш27
Ш28
Ш29
Ш30
Ш31
Ш32
Ш33
Ш34
Ш35
Ш36
Ш37
Ш38
Ш39
Ш40

306-16-23

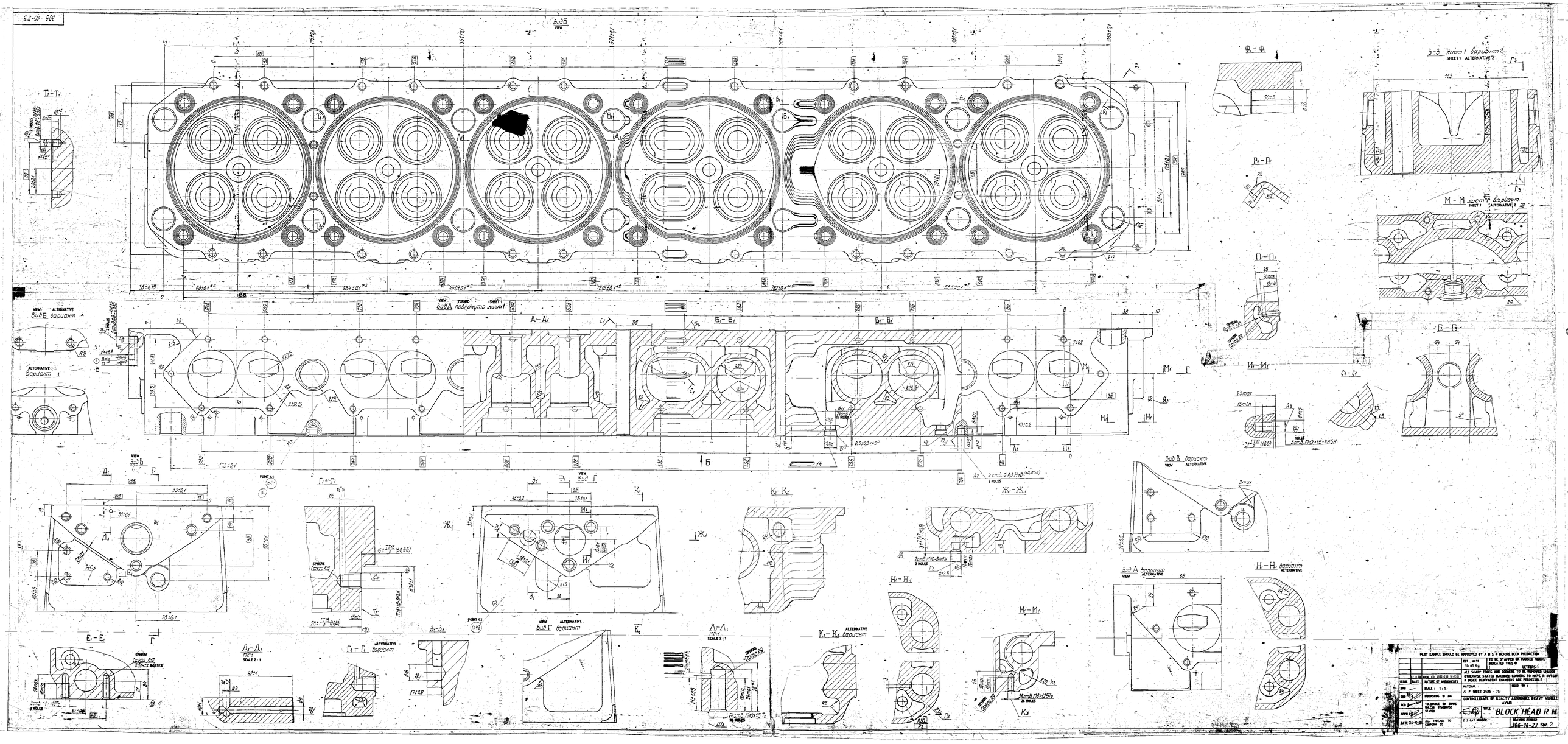
Вид Б
VIEW
Вид А повернуто лист 1
VIEW TURNED SHEET 1
Вид Б вариант
VIEW ALTERNATIVE
Вариант 1
ALTERNATIVE
А₁-А₁
Б₁-Б₁
В₁-В₁
Т₁-Т₁
Ф₁-Ф₁
Р₁-Р₁
3-3 лист 1 вариант 2
SHEET 1 ALTERNATIVE 2
М-М лист 1 вариант 2
SHEET 1 ALTERNATIVE 2
П₁-П₁
И₁-И₁
С₁-С₁
Б-Б
Вид В
VIEW
Вид В вариант
VIEW ALTERNATIVE
Вид Г
VIEW
Вид Г вариант
VIEW ALTERNATIVE
Д₁-Д₁
Е₁-Е₁
Г₁-Г₁
Г₁-Г₁ вариант
ALTERNATIVE
З₁-З₁
К₁-К₁
К₁-К₁ вариант
ALTERNATIVE
Ж₁-Ж₁
Н₁-Н₁
Н₁-Н₁ вариант
ALTERNATIVE
М₁-М₁
Вид А вариант
VIEW ALTERNATIVE
SCALE 2 : 1
POINT A1
POINT A2
SPHERE
2 HOLES
3 HOLES
25 HOLES
35 HOLES
PLOT SAMPLE SHOULD BE APPROVED BY A H S P BEFORE MAX PRODUCTION
TO BE STAMPED IN MARKED AREAS INDICATED THUS ▼
LETTERS 1
ALL SHARP EDGES AND CORNERS TO BE REMOVED UNLESS OTHERWISE STATED MACHINED CORNERS TO HAVE A MINIMUM OF 3MM EQUIVALENT CHAMFERS ARE PERMISSIBLE
NATIONAL :
A F GOST 2685 - 75
CONTROLLERATE OF QUALITY ASSURANCE HEAVY VEHICLES AVADI
SCALE : 1 : 1
TOLERANCE ON DIMS UNLESS OTHERWISE STATED
ALL THREADS TO COMPLY TO
EST. MASS 36.61 Kg.
LETTERS 1
BLOCK HEAD R M
306-16-23 Sht. 2

DRAWING NUMBER 306-16-28 SHEET No. 1 OF 1

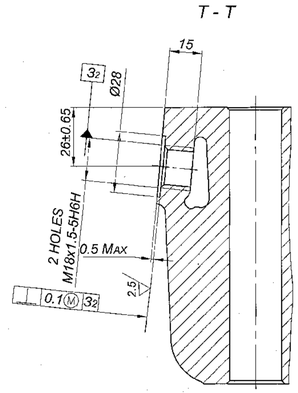

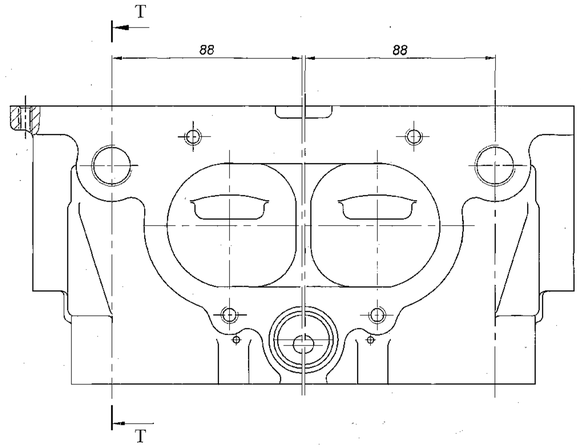

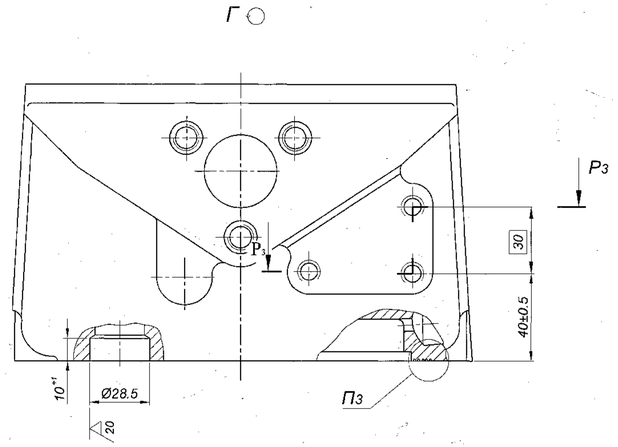

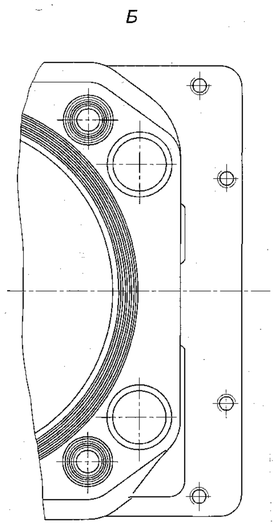

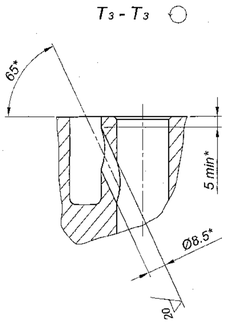

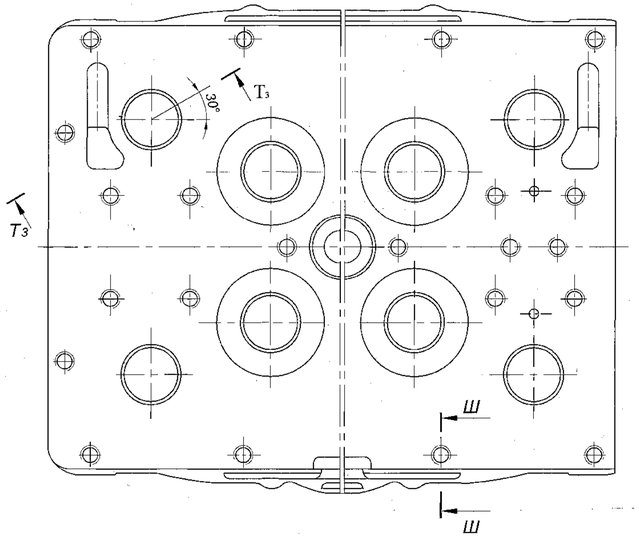

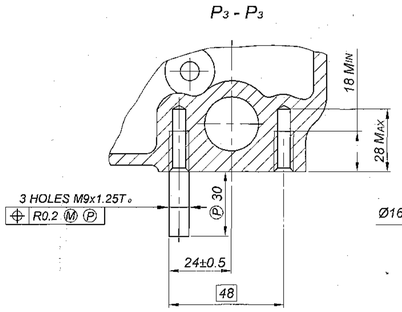

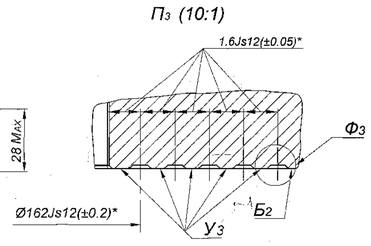

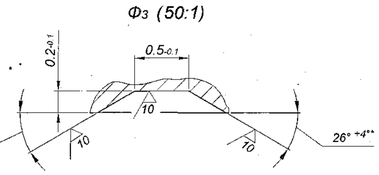

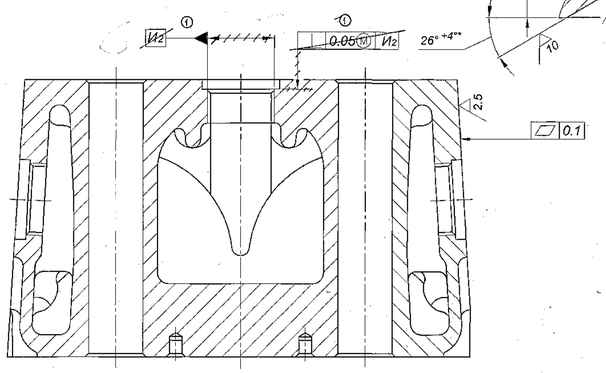

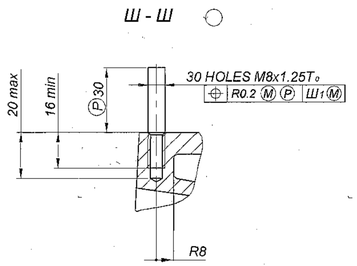

1. Nicks, dents, marks, and fissures from machining are not allowed on the surface Y_3.
2. Surfaces $Б_2$ and Y_3 should be placed in one flatness.
3. Remaining graph, dimensions, surface finish, technical requirements are as per drawing 306-16-23.

PILOT SAMPLE SHOULD BE APPROVED BY A H S P BEFORE BULK PRODUCTION.

EST. WT. 36.61 | TO BE STAMPED OR MARKED WHERE INDICATED THUS # (LETTERS)

ALL SHARP EDGES AND CORNERS TO BE REMOVED UNLESS OTHERWISE STATED MACHINED CORNERS TO HAVE R OUTSIDE R INSIDE EQUIVALENT CHAMFERS ARE PERMISSIBLE.

ISSUE	DATE	NATURE OF AMENDMENTS
1	4-3-09	NOTM. No 117-04, F-158
A	09.07.08	DO CORRECTION.

DRN | CHD | APPD | DATE 4/3/09 | SCALE:- 1:1 | DIMENSIONS IN mm | TOLERANCE ON DIMNS UNLESS OTHERWISE STATED IS : 2102 - 69 | ALL THREADS TO CONFORM TO

MATERIAL :- AK7ч(АЛ9) GOST 1583-93

USED ON :- CL 306-01-36

CONTROLLERATE OF QUALITY ASSURANCE (HEAVY VEHICLES) AVADI

TITLE :- CYLINDER HEAD RH (A)

D S CAT NUMBER

DRAWING NUMBER 306-16-28

F-3 Ж 168

SIZE A0

DRG. INDIANISED BASED ON RUSSIAN ORIGINAL ISSUE - NIL

DRAWING NUMBER 306-34-27

SHEET No. 1 OF 1

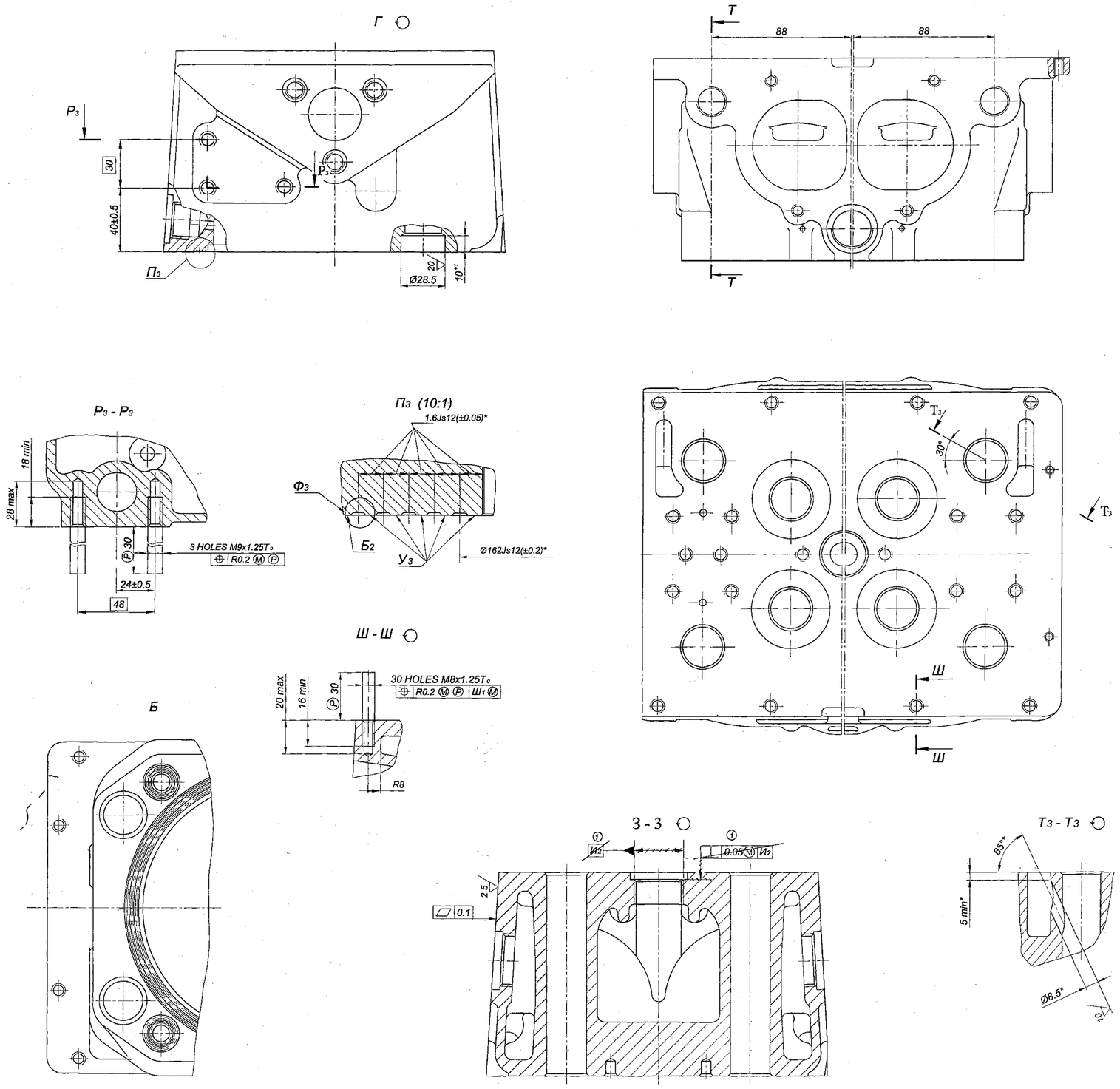

1. Nicks, dents, marks and cracks from machining are not allowed on the surface Y_3.
2. Surfaces $Б_2$ and Y_3 should be placed in one flatness.
3. Remaining dimensions ,surface finish, technical requirements are as per drawing 306-16-23.
4. Remaining graph should be as per drawing 306-16-23 with mirror reflection.

PILOT SAMPLE SHOULD BE APPROVED BY A H S P BEFORE BULK PRODUCTION.

EST. WT. (Kg) 36.61	TO BE STAMPED OR MARKED WHERE INDICATED THUS # (LETTERS)

ALL SHARP EDGES AND CORNERS TO BE REMOVED UNLESS OTHERWISE STATED MACHINED CORNERS TO HAVE R OUTSIDE R INSIDE EQUIVALENT CHAMFERS ARE PERMISSIBLE.

ISSUE	DATE	NATURE OF AMENDMENTS
1	4-3-09	NOTN. No. 117-04. F-158

DRN	
CHD	
APPD	
DATE	16/3/07
SCALE:- 1 : 1	
DIMENSIONS IN mm	
TOLERANCE ON DIMNS UNLESS OTHERWISE STATED IS : 2102 - 69	
ALL THREADS TO CONFORM TO	

MATERIAL :- АК7ч(АЛ9) GOST 1583-93

USED ON :- СЬ 306-02-36

CONTROLLERATE OF QUALITY ASSURANCE (HEAVY VEHICLES) AVADI

TITLE :- CYLINDER HEAD LH

D S CAT NUMBER

DRAWING NUMBER 306-34-27

SIZE A0

F-3

ORG. INDIANISED BASED ON RUSSIAN ORIGINAL ISSUE - NIL