REVISION-II

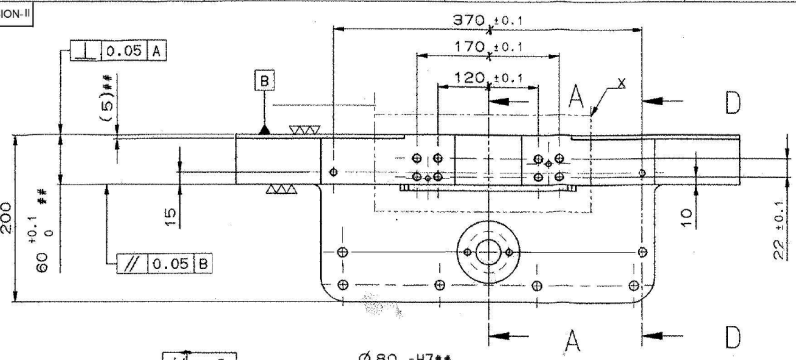

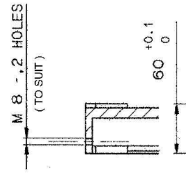

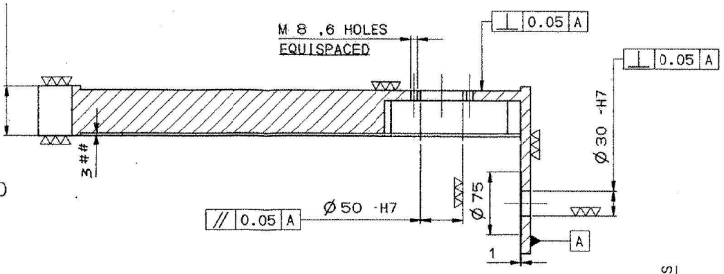

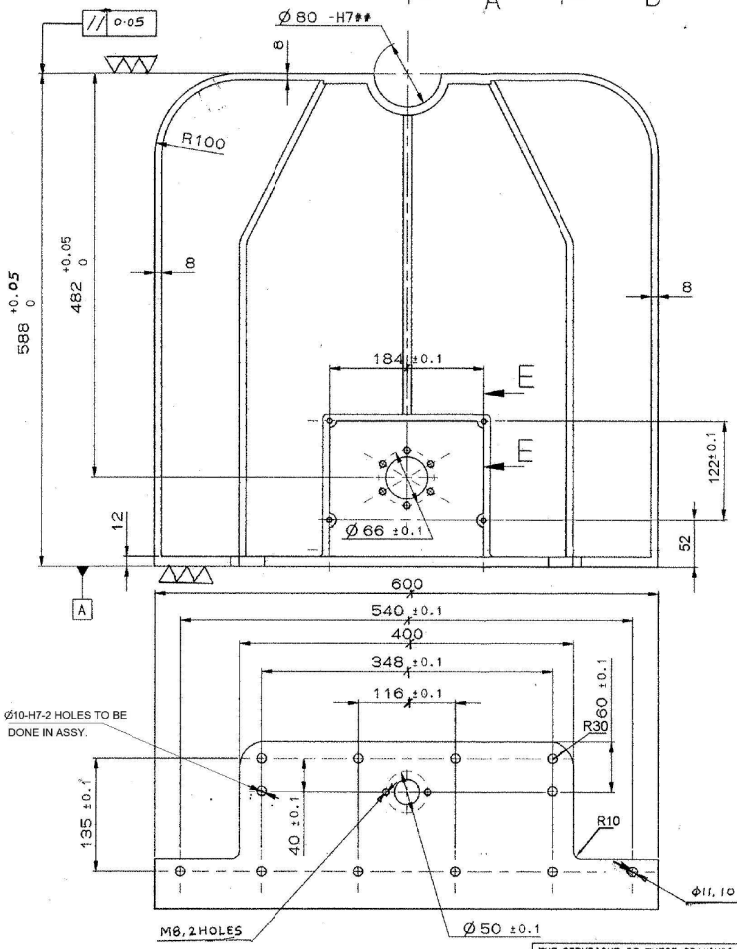

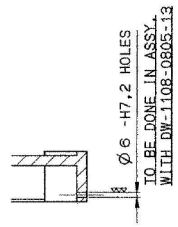

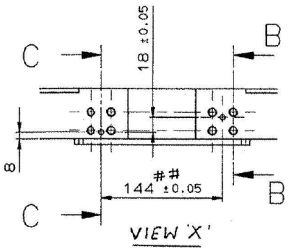

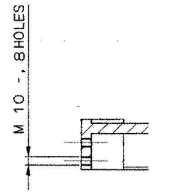

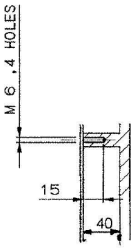

** TO BE MANUFACTURED FROM DW-1108-0804-12-2

TO BE DONE IN ASSY. WITH DW-1108-0805-13 AFTER SCREWING AND DOWELING

NOTE:-

DIMENSION Ø28-H7 AND M8-4 HOLES POSITION TO BE MARKED AND DONE IN ASSY. THESE DIMENSIONS NOT SHOWN IN DRAWING.

***

PHOSPHATING AND PAINTING

1. PHOSPHATING TO BE DONE AS PER IS:3618 CLASS B
2. PRIMER RED OXIDE TO STANDARD IS:12744 TO BE APPLIED BY FIRM WHO IS SUPPLYING STORE TO MPF AS PER DW-1134
3. PAINTING TO BE DONE AT MPF IN OR DURING ASSEMBLY AS PER DW-1134
4. DO NOT APPLY PRIMER AND PAINT ON THREAD AND BORE SURFACE

▽▽ (▽▽▽)

No.OFF	DESCRIPTION	PART No.	MATERIAL	STANDARD	DIMENSIONS	REMARKS
1	LAUNCHER MOUNTING BRACKET-I		**			***

GENERAL TOLERANCE	
LINEAR DIMENSIONS	
0-6	±0.1
6-30	±0.2
30-120	±0.3
120-315	±0.5
315-1000	±0.8
1000-2000	±1.2
ANGULAR DIMENSION	
1-10	±1°
10-50	±30'
50-100	±20'
>100	±10'

VALUE IN "um"

~	>25
▽	6-25
▽▽	1.6-6
▽▽▽	0.025-1.6
▽▽▽▽	<0.025

(G Ramesh)
Commander
Chief Inspector of Naval Armament
for Controller of Naval Armament Inspection

No.OFF	DRG. No. OF ASSOCIATED PART	INDEX	ALTERATION	DATE	NAME

Ø6-H7	+0.015 0
Ø28-H7	+0.021 0
Ø30-H7	+0.025 0
Ø50-H7	+0.030 0
Ø80-H7	+0.035 0
NOMINAL SIZE & FIT	DEVIATION

LAUNCHER MOUNTING BRACKET-I
LAUNCHER MOUNTING BRACKET ASSY-I
LR-MR LAUNCHER
KAVACH MOD-II

MACHINE TOOL PROTOTYPE FACTORY, AMBERNATH

Design Office

SCALE 1:1	DRAWN	02.02.09 VIJAY
	CHECKED	
	APPROVED	
REPLACED BY		
REPLACED FOR		
DRAWING No. DW-1108-0804-12		

THE COPYRIGHT OF THESE DRAWINGS AND ATTACHMENTS TO THE INDIAN ORDNANCE FACORIES, MINISTRY OF DEFENCE, GOVT. OF INDIA THEY SHOULD NOT BE COPIED, RE-PRODUCED IN ANY WAY OR THE INFORMATION CONTAINED THEREIN MADE AVAILABLE TO UNAUTHORISED PERSONES WITHOUT THE WRITTEN PERMISSION OF THE DIRECTOR OF ORDNANCE FACTORIES.

REVISION-I

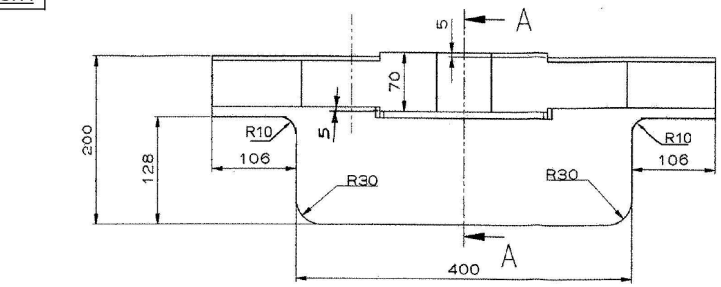

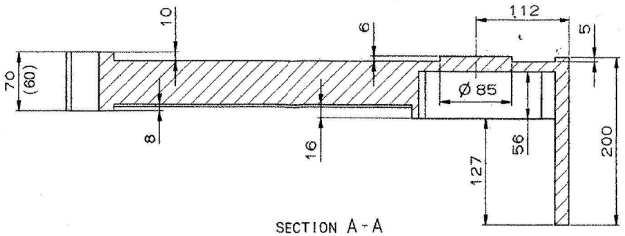

SECTION A-A

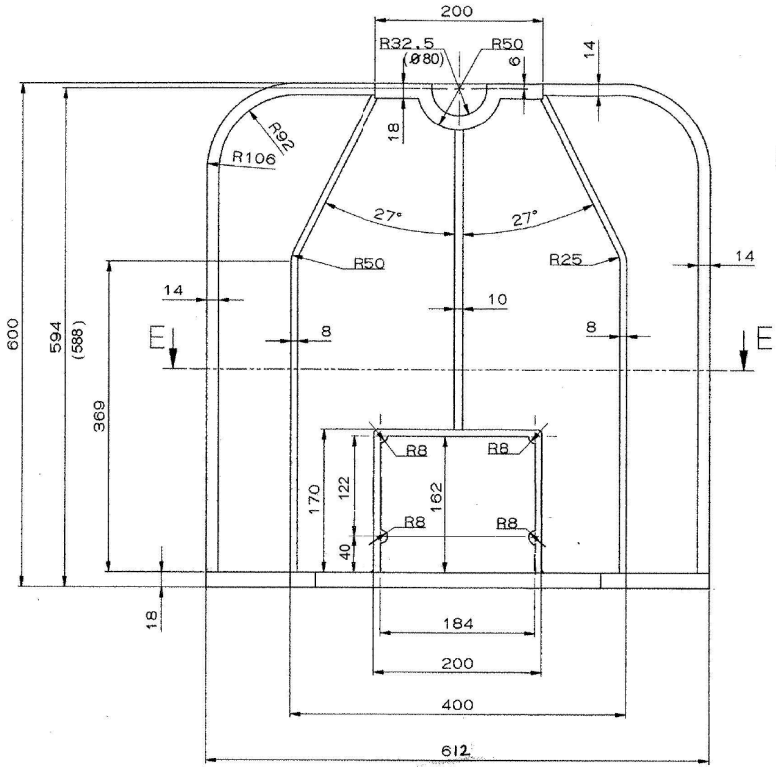

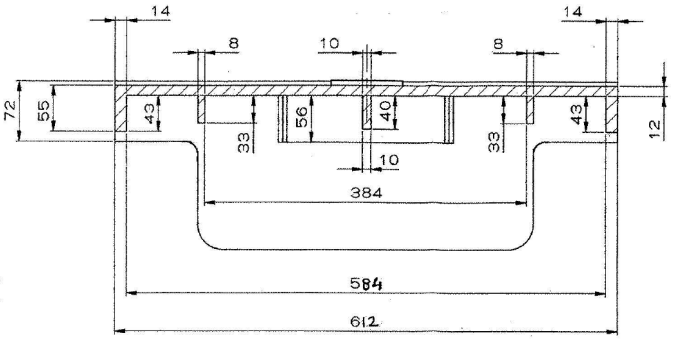

SECTION E-E

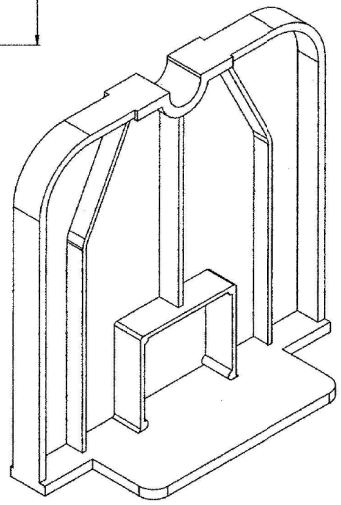

NOTE:

1. CASTING TO BE DULY CLEANED & FREE FROM FINS, RUNNERS, RISERS ETC.
2. CASTING TO BE FREE FROM CRACKS, BLOW HOLES & OTHER CASTING DEFECTS.
3. CASTING TO BE SUPPLIED IN HEAT TREATED CONDITION TO ACHIEVE MECHANICAL PROPERTIES AS SPECIFIED.
4. ALL UNSPECIFIED RADII ARE 5mm.
5. CASTING AND TEST BAR SHOULD BE SUPPLIED AT SAME HEAT TREATED CONDITION.
6. CASTING SHOULD BE TESTED FOR RADIOGRAPHIC TEST AS PER ASTM E-446-1998, LEVEL-II
7. MACHINING SIZE SHOWN IN BRACKET

***

MATL.: Gr A2 BS:3100
ALT. MATL:-GR 280-520W IS:1030-89

GRADE	C	Si	Mn	Cr	Ni	S Max	P Max	CU Max	YIELD STRENGTH (Min)	ULTIMATE TENSILE STRENGTH (Min)	PERCENTAGE ELONGATION % (Min)	REDUCTION OF AREA % (Min)	IMPACT STRENGTH (Min)	ANGLE OF BEND (Min)
GR 280-520 W IS:1030-89	0.25 #	0.60	1.20	0.35 +	0.40 +	0.035	0.040	0.40 +	280 MPa ●	520 MPa	18	25	22 Kgf.m/cm2	60°
Gr A2 BS:3100	0.35 Max	0.60 Max	1.0 Max	-	-	0.060	0.060	-	260 N/mm2	490 N/mm2	18	-	20 J.Min	90°

FOR EACH REDUCTION OF 0.01% CARBON BELOW 0.25% AN INCREASE OF 0.04% MANGANESE ABOVE THE MAXIMUM SPECIFIED WILL BE PERMITTED UPTO A MAXIMUM OF 1.40% FOR GRADE 280-520W

\+ THE TOTAL CONTENT OF THESE RESIDUAL ELEMENTS SHALL NOT EXCEED 1.00%

● IF MEASUREABLE THE UPPER YIELD STRESS. OTHERWISE 0.2 PERCENT PROOF STRESS.

THE COPYRIGHT OF THESE DRAWINGS AND ATTACHMENTS TO THE INDIAN ORDNANCE FACORIES, MINISTRY OF DEFENCE, GOVT. OF INDIA THEY SHOULD NOT BE COPIED,RE-PRODUCED IN ANY WAY OR THE INFORMATION CONTAINED THEREIN MADE AVAILABLE TO UNAUTHORISED PERSONES WITHOUT THE WRITTEN PERMISSION OF THE DIRECTOR OF ORDNANCE FACTORIES.

No.OFF	DESCRIPTION	PART No.	MATERIAL	STANDARD	DIMENSIONS	REMARKS
1	CASTING FOR LAUNCHER MOUNTING BRACKET-I		***			Wt:-60.1 Kg

GENERAL TOLERANCE

LINEAR DIMENSIONS

0-6	±0.1
6-30	±0.2
30-120	±0.3
120-315	±0.5
315-1000	±0.8
1000-2000	±1.2

ANGULAR DIMENSION

1-10	±1°
10-50	±30'
50-100	±20'
>100	±10'

VALUE IN "um"

~	>25
▽	6-25
▽▽	1.6-6
▽▽▽	0.025-1.6
▽▽▽▽	<0.025

NOMINAL SIZE & FIT | DEVIATION

CONTROLLERATE OF NAVAL ARMAMENT INSPECTION MUMBAI

(G Ramesh)
Commander
Chief Inspector of Naval Armament
for Controller of Naval Armament Inspection

No.OFF	ORG. No. OF ASSOCIATED PART	INDEX	ALTERATION	DATE	NAME

CASTING FOR LAUNCHER MOUNTING BRACKET-I
LAUNCHER MOUNTING BRACKET ASSY-I
LR-MR LAUNCHER
KAVACH MOD-II

SCALE 1:1	DRAWN	02.09.08 VIJAY
	CHECKED	
	APPROVED	
REPLACED BY		
REPLACED FOR		

MACHINE TOOL PROTOTYPE FACTORY, AMBERNATH

Design Office

DRAWING No. DW-1108-0804-12-2

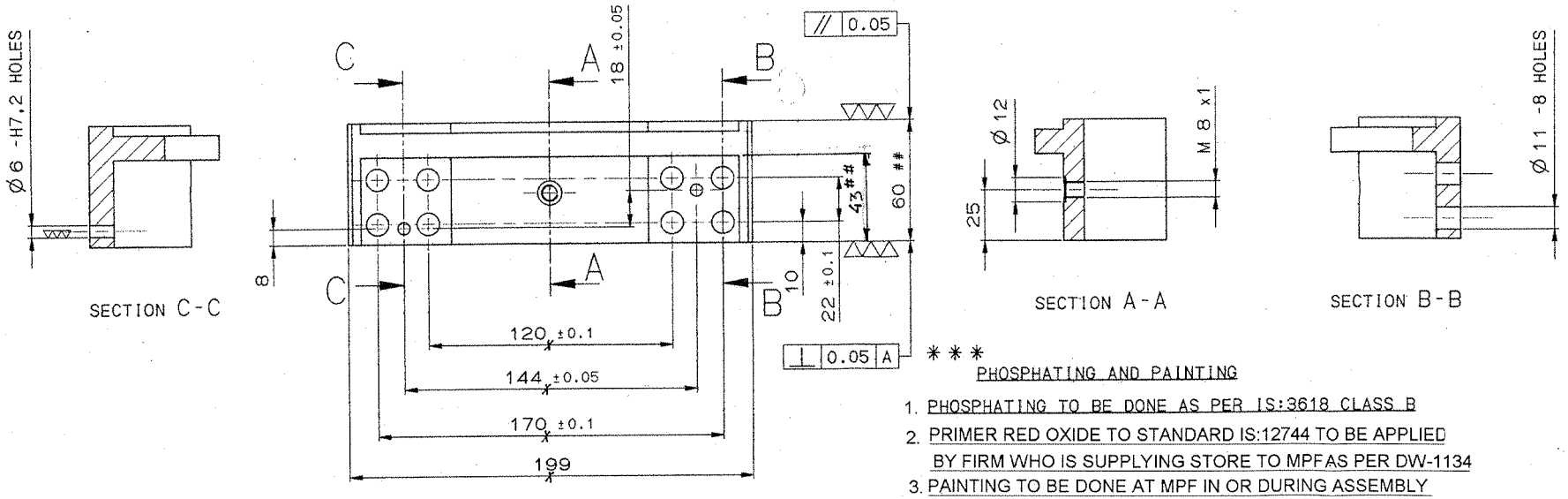

* * *

PHOSPHATING AND PAINTING

1. PHOSPHATING TO BE DONE AS PER IS:3618 CLASS B
2. PRIMER RED OXIDE TO STANDARD IS:12744 TO BE APPLIED BY FIRM WHO IS SUPPLYING STORE TO MPF AS PER DW-1134
3. PAINTING TO BE DONE AT MPF IN OR DURING ASSEMBLY AS PER DW-1134
4. DO NOT APPLY PRIMER AND PAINT ON THREAD AND BORE SURFACE

\# \# TO BE DONE IN ASSY. WITH DW-1108-0804-12 AFTER SCREWING AND DOWELING

* * TO BE MANUFACTURED FROM DW-1108-0805-13-2

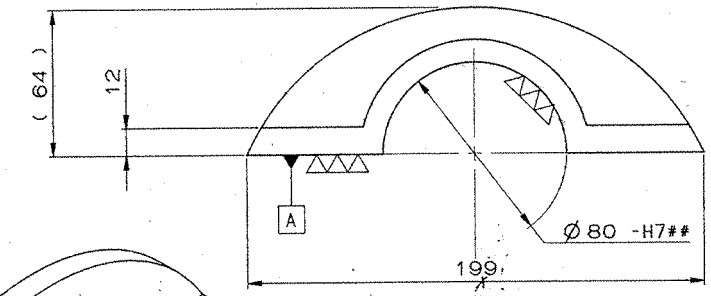

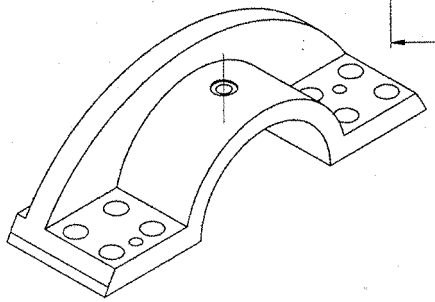

No.OFF	DESCRIPTION	PART No.	MATERIAL	STANDARD	DIMENSIONS	REMARKS
1	MOUNTING BLOCK		* *			* * *

GENERAL TOLERANCE	
LINEAR DIMENSIONS	
0-6	±0.1
6-30	±0.2
30-120	±0.3
120-315	±0.5
315-1000	±0.8
1000-2000	±1.2
ANGULAR DIMENSION	
1-10	±1°
10-50	±30'
50-100	±20'
>100	±10'
VALUE IN "um"	
~	>25
▽	8-25
▽▽	1.6-8
▽▽▽	0.025-1.6
▽▽▽▽	<0.025

NOMINAL SIZE & FIT	DEVIATION
Ø6-H7	+0.015 / 0
Ø80-H7	+0.035 / 0

CONTROLLERATE OF NAVAL ARMAMENT INSPECTION MUMBAI

(G Ramesh)
Commander
Chief Inspector of Naval Armament
for Controller of Naval Armament Inspection

No.OFF	DRG. No. OF ASSOCIATED PART	INDEX	ALTERATION	DATE	NAME

MOUNTING BLOCK
LAUNCHER MOUNTING BRACKET ASSY-I
LR-MR LAUNCHER
KAVACH MOD-II

SCALE	DRAWN	02.02.09	VIJAY
1:1	CHECKED		
	APPROVED		

REPLACED BY
REPLACED FOR

MACHINE TOOL PROTOTYPE FACTORY, AMBERNATH

Design Office

DRAWING No. DW-1108-0805-13

THE COPYRIGHT OF THESE DRAWINGS AND ATTACHMENTS TO THE INDIAN ORDNANCE FACORIES, MINISTRY OF DEFENCE, GOVT. OF INDIA THEY SHOULD NOT BE COPIED, RE-PRODUCED IN ANY WAY OR THE INFORMATION CONTAINED THEREIN MADE AVAILABLE TO UNAUTHORISED PERSONES WITHOUT THE WRITTEN PERMISSION OF THE DIRECTOR OF ORDNANCE FACTORIES.

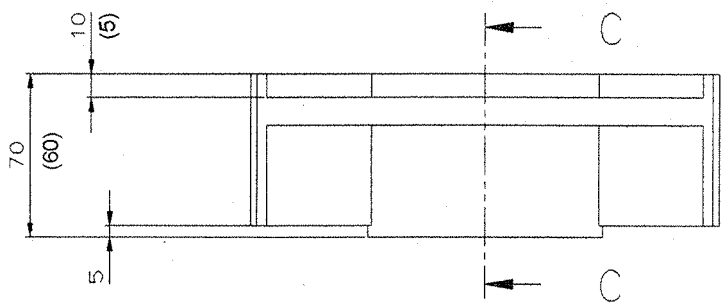

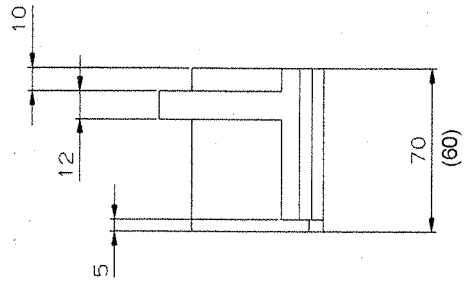

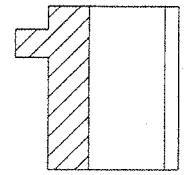

SECTION C-C

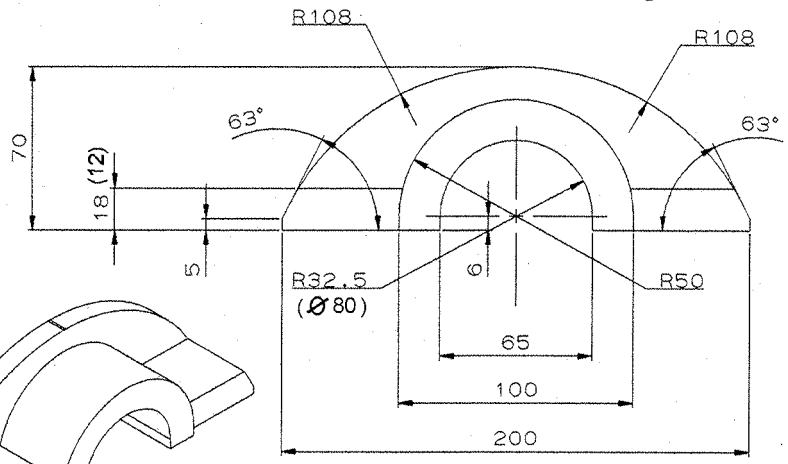

GRADE	C	Si	Mn	Cr	Ni	S Max	P Max	CU Max
GR 280-520 W IS:1030-89	0.25 #	0.60	1.20	0.35 +	0.40 +	0.035	0.040	0.40 +
Gr A2 BS:3100	0.35 Max	0.60 Max	1.0 Max	-	-	0.060	0.060	-

YIELD STRENGTH (Min)	ULTIMATE TENSILE STRENGTH (Min)	PERCENTAGE ELONGATION % (Min)	REDUCTION OF AREA % (Min)	IMPACT STRENGTH (Min)	ANGLE OF BEND (Min)
280 MPa ●	520 MPa	18	25	22 Kgf.m/cm2	60°
260 N/mm2	490 N/mm2	18	-	20 J.Min	90°

FOR EACH REDUCTION OF 0.01% CARBON BELOW 0.25% AN INCREASE OF 0.04% MANGANESE ABOVE THE MAXIMUM SPECIFIED WILL BE PERMITTED UPTO A MAXIMUM OF 1.40% FOR GRADE 280-520W

* * *

MATL.: Gr A2 BS:3100
ALT. MATL:-GR 280-520W IS:1030-89

NOTE:
1. CASTING TO BE DULY CLEANED & FREE FROM FINS, RUNNERS, RISERS ETC.
2. CASTING TO BE FREE FROM CRACKS, BLOW HOLES & OTHER CASTING DEFECTS.
3. CASTING TO BE SUPPLIED IN HEAT TREATED CONDITION TO ACHIEVE MECHANICAL PROPERTIES AS SPECIFIED.
4. ALL UNSPECIFIED RADII ARE 5mm.
5. CASTING AND TEST BAR SHOULD BE SUPPLIED AT SAME HEAT TREATED CONDITION.
6. CASTING SHOULD BE TESTED FOR RADIOGRAPHIC TEST AS PER ASTM E-446-1998, LEVEL-II
7. MACHINING SIZE SHOWN IN BRACKET

\+ THE TOTAL CONTENT OF THESE RESIDUAL ELEMENTS SHALL NOT EXCEED 1.00%

● IF MEASUREABLE THE UPPER YIELD STRESS, OTHERWISE 0.2 PERCENT PROOF STRESS.

No.OFF	DESCRIPTION	PART No.	MATERIAL	STANDARD	DIMENSIONS	REMARKS
1	CASTING FOR MOUNTING BLOCK		* * *			Wt:-2.56 Kg

GENERAL TOLERANCE

LINEAR DIMENSIONS

0-6	±0.1
6-30	±0.2
30-120	±0.3
120-315	±0.5
315-1000	±0.8
1000-2000	±1.2

ANGULAR DIMENSION

1-10	±1°
10-50	±30'
50-100	±20'
>100	±10'

VALUE IN "um"

~	>25
▽	8-25
▽▽	1.6-8
▽▽▽	0.025-1.6
▽▽▽▽	<0.025

CONTROLLERATE OF NAVAL ARMAMENT INSPECTION MUMBAI

(G Ramesh)
Commander
Chief Inspector of Naval Armament
for Controller of Naval Armament Inspection

No.OFF	ORG. No. OF ASSOCIATED PART	INDEX	ALTERATION	DATE	NAME

NOMINAL SIZE & FIT	DEVIATION

CASTING FOR MOUNTING BLOCK
LAUNCHER MOUNTING BLOCK ASSY.-1
LRMR LAUNCHER
KAVACH MOD-II

SCALE 1:1

DRAWN	02.02.09	VIJAY
CHECKED	"	
APPROVED		

REPLACED BY
REPLACED FOR

MACHINE TOOL PROTOTYPE FACTORY, AMBERNATH

Design Office

DRAWING No. DW-1108-0805-13-2

THE COPYRIGHT OF THESE DRAWINGS AND ATTACHMENTS TO THE INDIAN ORDNANCE FACORIES, MINISTRY OF DEFENCE, GOVT. OF INDIA THEY SHOULD NOT BE COPIED, RE-PRODUCED IN ANY WAY OR THE INFORMATION CONTAINED THEREIN MADE AVAILABLE TO UNAUTHORISED PERSONES WITHOUT THE WRITTEN PERMISSION OF THE DIRECTOR OF ORDNANCE FACTORIES.

REVISION-I

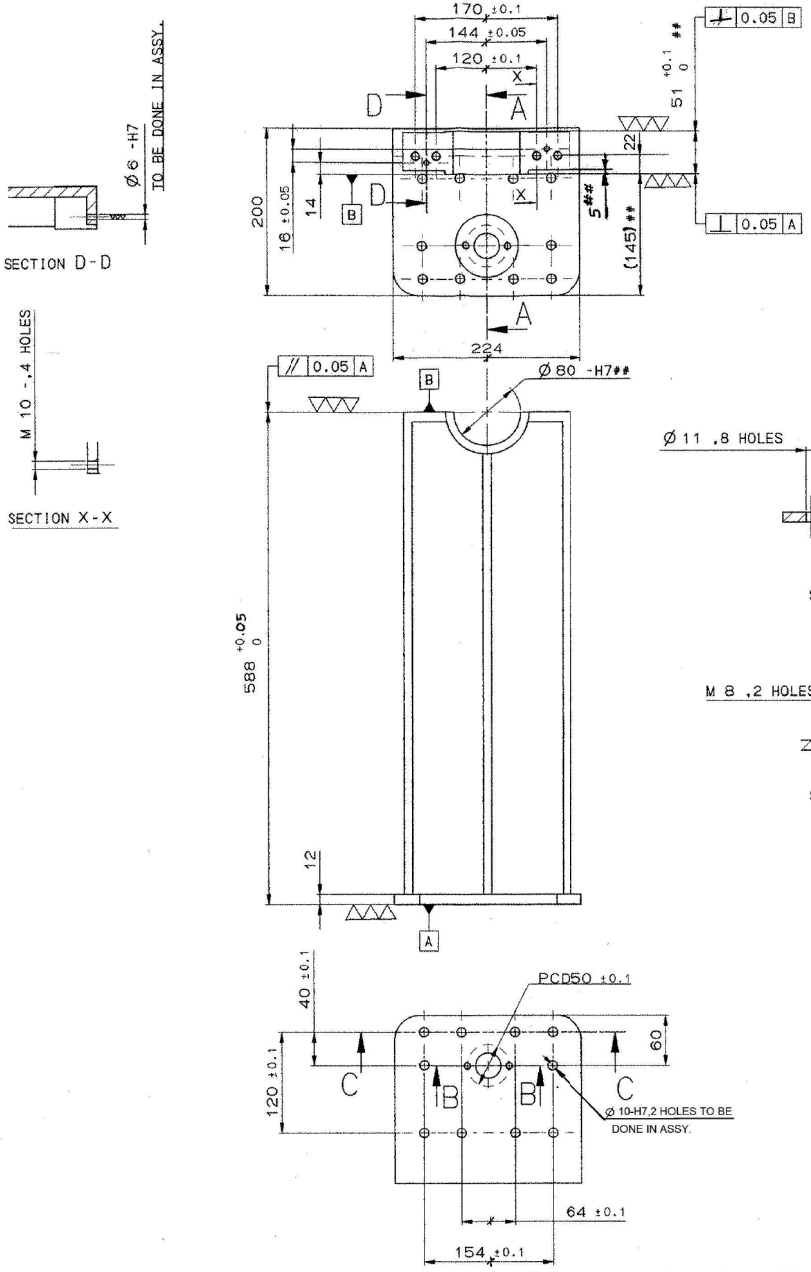

**
TO BE MANUFACTURED FROM DW-1108-0903-12-2

\#\#
TO BE FINISHED IN ASSY. WITH DW-1108-0904-13.AFTER SCREWING AND DOWELING

***
PHOSPHATING AND PAINTING

1. PHOSPHATING TO BE DONE AS PER IS:3618 CLASS B
2. PRIMER RED OXIDE TO STANDARD IS:12744 TO BE APPLIED BY FIRM WHO IS SUPPLYING STORE TO MPF AS PER DW-1134
3. PAINTING TO BE DONE AT MPF IN OR DURING ASSEMBLY AS PER DW-1134
4. DO NOT APPLY PRIMER AND PAINT ON THREAD AND BORE SURFACE

▽▽ (▽▽▽)

No.OFF	DESCRIPTION	PART No.	MATERIAL	STANDARD	DIMENSIONS	REMARKS
1	LAUNCHER MOUNTING BRACKET-II		**			***

GENERAL TOLERANCE

LINEAR DIMENSIONS

0-6	±0.1
6-30	±0.2
30-120	±0.3
120-315	±0.5
315-1000	±0.8
1000-2000	±1.2

ANGULAR DIMENSION

1-10	±1°
10-50	±30'
50-100	±20'
>100	±10'

VALUE IN "um"

▽	>25
▽▽	6-25
▽▽▽	1.6-6
▽▽▽▽	0.025-1.6
▽▽▽▽	<0.025

NOMINAL SIZE & FIT	DEVIATION
Ø 6-H7	+0.015 0
Ø 30-H7	+0.025 0
Ø 80-H7	+0.030 0

(G Ramesh)
Commander
Chief Inspector of Naval Armament
for Controller of Naval Armament Inspection

No.OFF	DRG. No. OF ASSOCIATED PART	INDEX	ALTERATION	DATE	NAME

LAUNCHER MOUNTING BRACKET-II
LAUNCHER MOUNTING BRACKET ASSY-II
LR-MR LAUNCHER
KAVACH MOD-II

SCALE 1:1
DRAWN 02.020.09 VIJAY
CHECKED
APPROVED
REPLACED BY
REPLACED FOR

MACHINE TOOL PROTOTYPE FACTORY, AMBERNATH
Design Office
DRAWING No. DW-1108-0903-12

THE COPYRIGHT OF THESE DRAWINGS AND ATTACHMENTS TO THE INDIAN ORDNANCE FACORIES, MINISTRY OF DEFENCE, GOVT. OF INDIA THEY SHOULD NOT BE COPIED,RE-PRODUCED IN ANY WAY OR THE INFORMATION CONTAINED THEREIN MADE AVAILABLE TO UNAUTHORISED PERSONES WITHOUT THE WRITTEN PERMISSION OF THE DIRECTOR OF ORDNANCE FACTORIES.