DRG.NO- VFJ/16/09/00045

ALL DIMENSIONS ARE IN M.M.

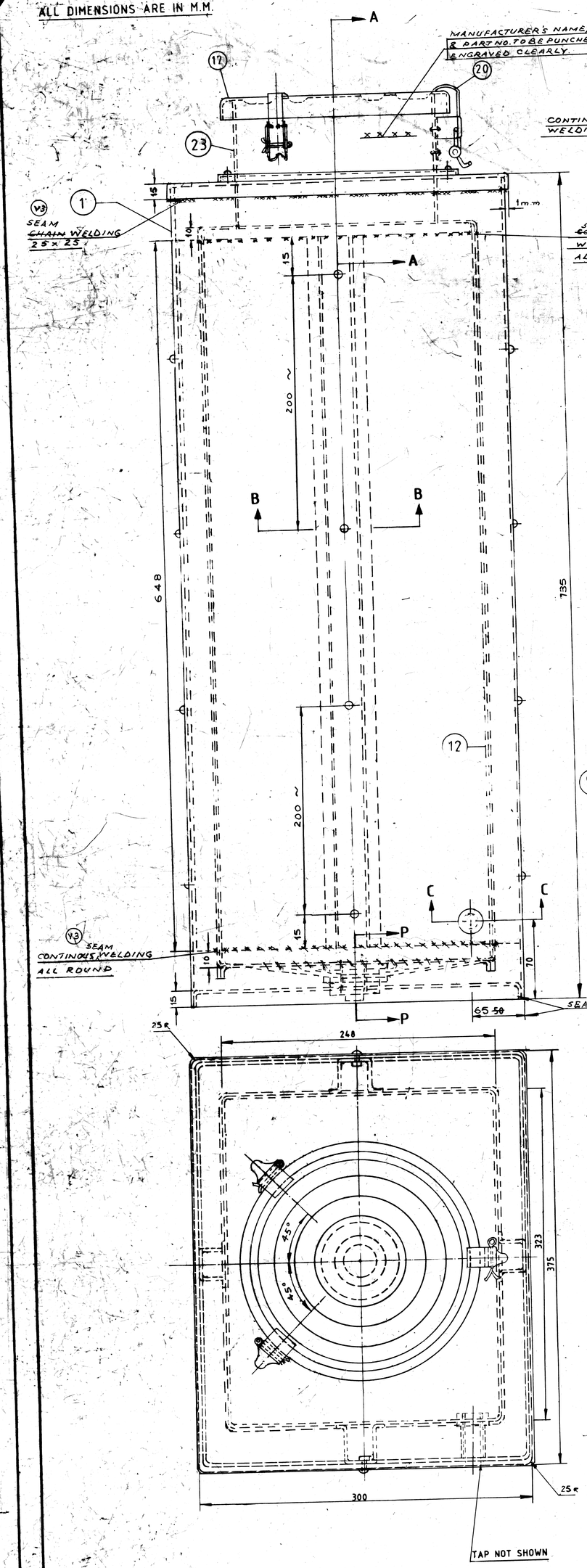


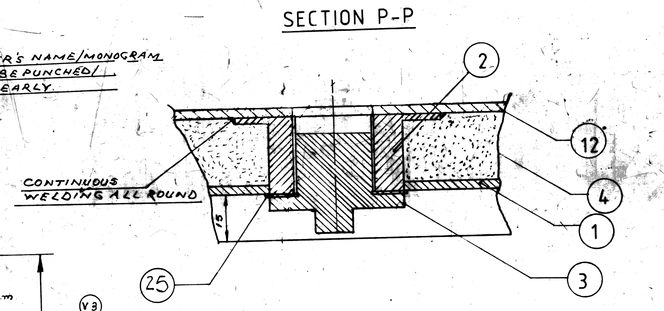


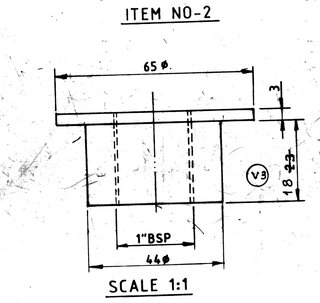


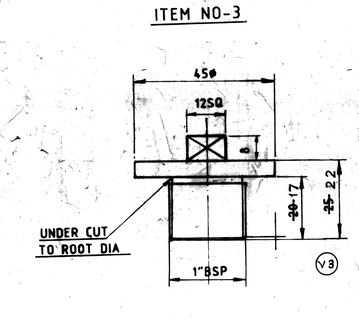


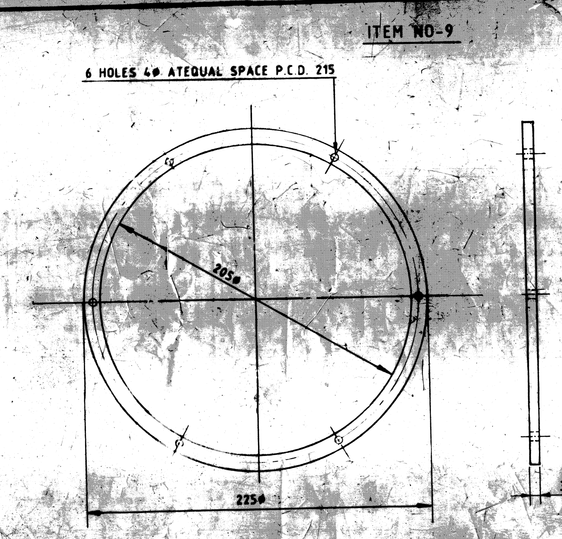


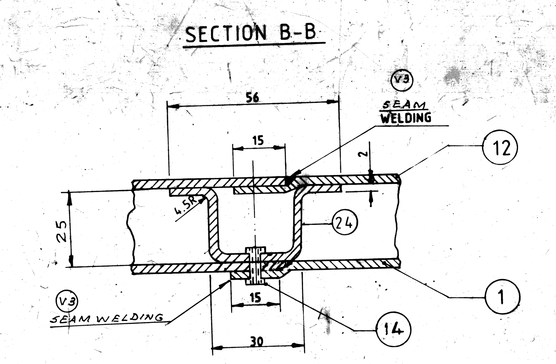


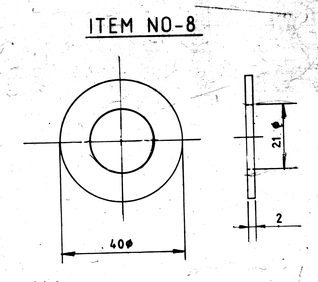


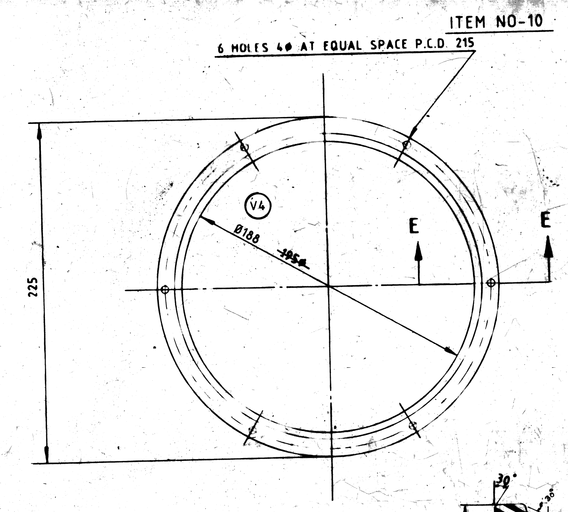


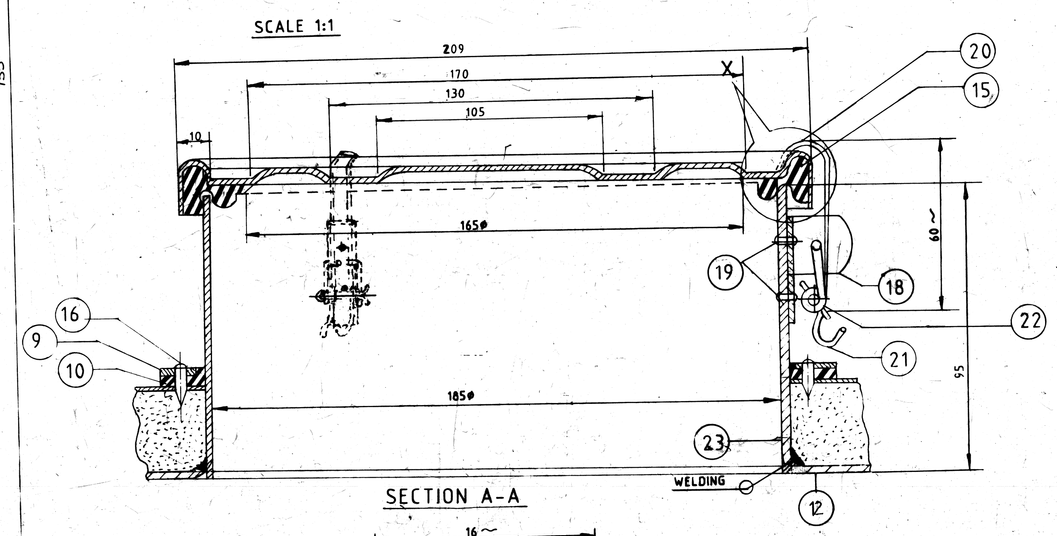


NOTE:-2

OUTSIDE SURFACES. TO BE PRETREATED AS PER IS:3618 CLASS 3 FINISH AND SHALL BE APPLIED WITH ZINC PRIMER TO SPECN.IS:2074. PAINT RFU PRIMER RED OXIDE OF IRON AND ZINC CHROMATE UNIVERSAL SYNTHETIC BRUSHING/SPRAYING.FINISH COATING OF PAINT IS TO BE DONE WITH ACRALKD MATT FINISH QD PAINT AS PER TELCO SPECN.SS:7335A COLOUR SCAMIC OG TO IS:5-97 COLOUR SHADE 294 TO BE USED WITH THINNER AS PER TELCO SPECN. SS:7530.

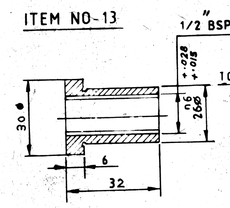


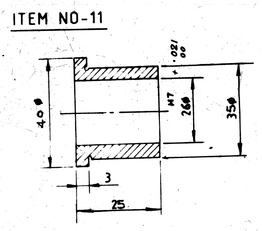


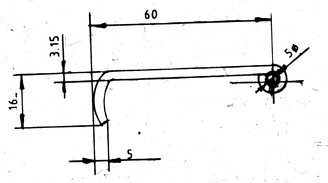


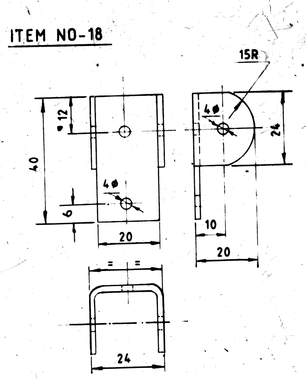


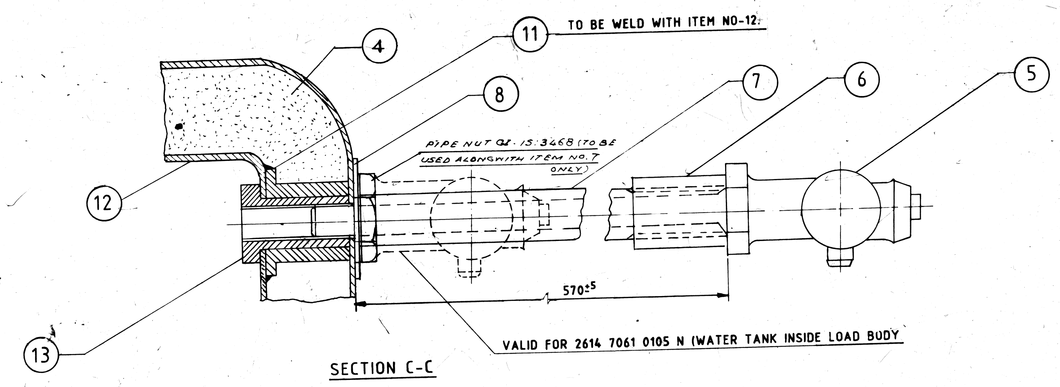


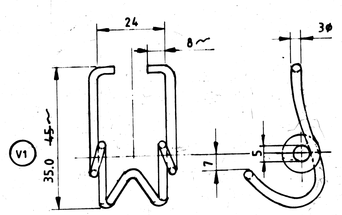


| ITEM NO. | MATERIAL / SIZE / DISCRIPTION / SPECIFICATION | QNTY. |
|---|---|---|
| 25 | RUBBER WASHER 25 x 50 x 2 THK. (SMMT RUBBER NO.3 GR 'C') | 4 |
| 24 | MILD STEEL SHEET 2.0 mm THICK IS: 1730-1961 | 4 |
| 23 | STAINLESS STEEL AS PER AISI -304 14 BG. | 1 |
| 22 | SPLIT PIN 4 M.M. x 40 M.M. LENGTH. IS: 549-74 | 1 |
| 21 | SPRING STEEL WIRE TO IS: 4454 $^{-25}$ PT-III. GR 15 | 1 |
| 20 | MILD STEEL SHEET $^{3.15}$ M.M. THICK x 20 M.M. WIDE. IS: 1730-1961 | 1 |
| 19 | RIVET 4MM x 8MM STAINLESS STEEL AS PER AISI-304 | 6 |
| 18 | MILD STEEL SHEET 2 M.M THICK IS: 1730-1961 | 3 |
| 17 | STAINLESS STEEL SHEET AS PER AISI -304 20 BG | 1 |
| 16 | SELF TAPPING SCREW. IS: 7173-$^{89}$ ST. 3.5x $^{9.5C}$ | 6 |
| 15 | NATURAL RUBBER (SMMT RUBBER NO 3 GR. 'C'). | 1 |
| 14 | RIVET MILD STEEL 4 M.M. DIA x 10M.M. IS:2998--82 | 16 |
| 13 | BRASS BUSH (MATL. AS PER IS:319-89 GR.-3 | 1 |
| 12 | STAINLESS STEEL SHEET AS PER AISI -304 20 BG | 1 |
| 11 | STAINLESS STEEL BUSH AS PER AISI -304 | 1 |
| 10 | NATURAL RUBBER 3 M.M. THICK (SMMT RUBBER NO 3 GR. 'C') | 1 |
| 9 | MILDSTEEL SHEET $^{3.15}$ M.M. THICK IS: 1730 -1961 | 1 |
| 8 | STAINLESS STEEL SHEET 14 BG THICK AS PER AISI -304 | 1 |
| 7 | G.I. PIPE 570 LONG WITH 1/2" BSP THREAD 35 M.M. LONG AT BOTH ENDS. WITH PIPE NUT Gl. No.15:3468. | 1 |
| 6 | GALVANISED STEEL SOCKET 1/2"BSP x 35 M.M. | 1 |
| 5 | SELF CLOSING TAP BRASS 15 M.M. PUSH BUTTON TYPE IS: 1711-84 | 1 |
| 4 | THERMOCOLE 25 M.M. THICK. IS:4671 TYPE 1 (DENSITY 25) | 1 |
| 3 | BRASS BAR 45ø IS: 319-89 GR-I | 1 |
| 2 | STAINLESS STEEL BAR ø65 AS PER AISI -304 | 1 |
| 1 | MILD STEEL SHEET 1m.m THICK IS:1730-1961 | 1 |

ASSY. DRG. NO. 2614.7000.0016, 2614.7061.0001

NOTE 1- ITEM NO-7 TO BE USED FOR WATER TANK OUTSIDE THE LOAD BODY ONLY.

APPROVED PROVISIONALLY

PILOT SAMPLE TO BE APPROVED BEFORE BULK MANUFACTURE.

| PART NO. | DESCRIPTION | MATERIAL | NO OFF | DRG NO | DATE | DIFFERENCE NAME | APPROVED |
|---|---|---|---|---|---|---|---|
| 40205 (V5) | DIA 180 WAS 195. | | | | 19.06.06 | | |
| V4 | 40205 (V5) DIA 180 WAS 195. | | | | 22.12.05 | | |
| V3 | 40205 (V5) DIA 180 WAS 195 (V4) | | | | | | |
| 40187 | PIPE NUT G 1/2 ADDED AGAINST | | | | 31.10.05 | | |
| V2 | ITEM NO.7 IN BILL OF MATERIAL. | | | | 15.6.05 | | |
| 40178 | DIM. 35 WAS 45 IN ITEM NO-21 | | | | | | |
| V1 | | | | | | | |
| 40129 | NEW DRAWING CREATED | | | | 27.09.04 | | |
| INDEX | ALTERATION | DATE | DWN | CHK | | | |

DRAWN: 29.08.03 SAMA
TRACED: 29.08.03 SAMA
CHECKED: 25.11.03 TN RAO
DWN/STD SHOP: 31.03.04

SCALE 1:2 REF. DRG.

# ASSY WATER TANK
(INSULATED) 55 LTRS.
LPTA 713TC/32

V.F.J. VEHICLE FACTORY JABALPUR

VFJ/16/09/00045

V4 V3 V2 V1