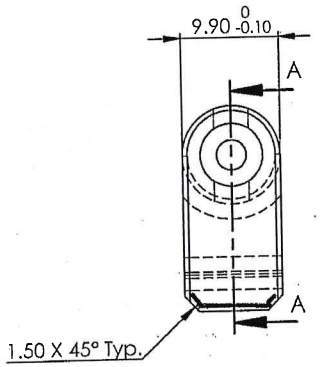

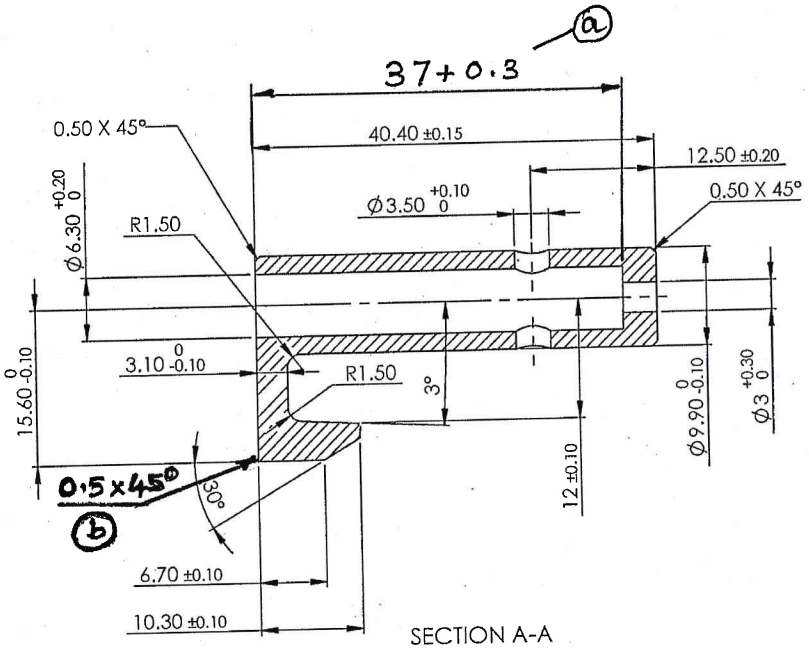

SECTION A-A

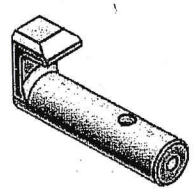

UN CONTROLLED COPY

CERTIFIED CORRECT COPY OF APPROVED DRAWINGS AT THIS DATE 30/4/21
Design & Drawing Office
Ordnance Factory,
Tiruchirappalli-620016

b	DA.NO. 24/21	23/3/21
a	DA.NO. 07/21	29/01/2021
AMENDMENT		SIG. & DATE

MIM 4605 Composition

Element	C	Mn	Si	Ni	Mo	Cr	S	P
Min	0.3	-	-	1.5	-	-	-	-
Max	0.6	0.5	0.5	2.5	0.5	0.5	0.05	0.05

Material: MIM 4605	3rd Angle	DWG Details SIGN	DATE.
Hardness: 400-450 HV	DRAWN		
	CHECKED		
Finish: Manganese Phosphated	HOS/D&DO		
	OFFICER/Prodn		
Un tollerated dimensions IS:2102 Medium	OFFICER/QC		
	DY.OFFICER/DDO		
PDM CONTROL			

SUB: **Cross Bolt Hook Latch**

FOR: GENERAL ASSY

Do not scale Drawing

PROJ. TRICHY ASSAULT RIFLE

QPG 1

DWG. No.: MIM-K-4004-~~00~~ ~~01~~ 02

Wt. (Appx) gm 19.42

ORDNANCE FACTORY TIRUCHIRAPPALLI–16.

SHEET: 1 OF 1