DRG NO 0 2 0 4 0 3 0 2 0 2 1 8 0 0 1 0 0 D C
IC SS S AA A C SST

GEN.TOL. ± ±0.2

DRAWING CONVENTION CONFIRM TO INDIAN STDS.
DIMN.IN mm UNLESS OTHERWISE STATED

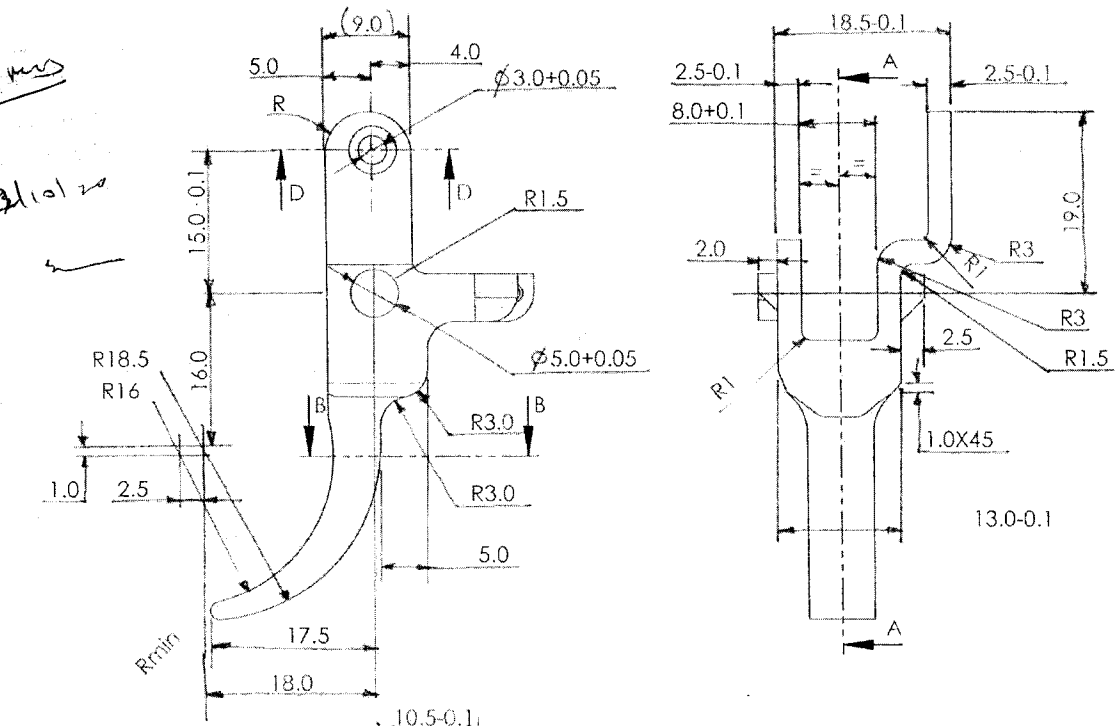

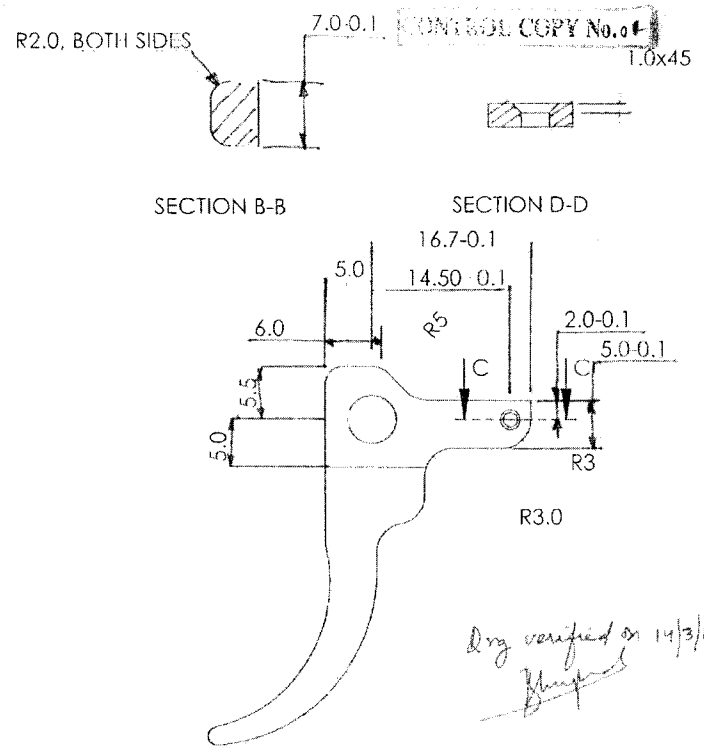

Dwg verified on 14/3/16

SECTION A-A

Received on 29/11/15

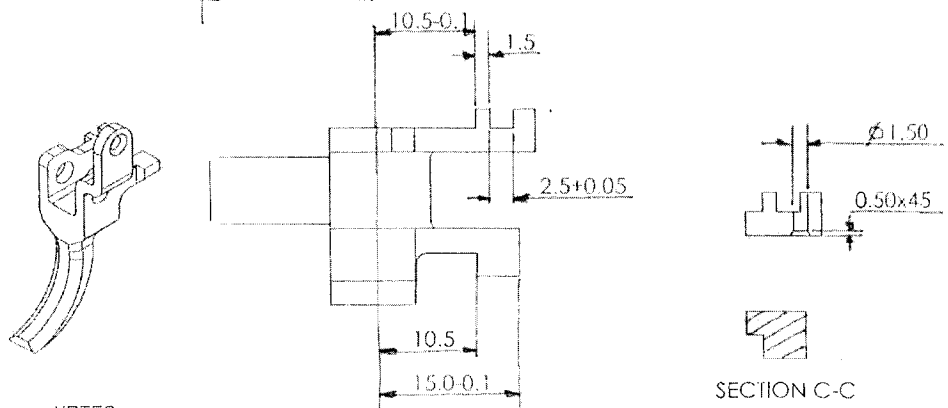

SECTION C-C

NOTES:
1) REMOVE ALL SHARP EDGES AND BURRS.
2) TOL FOR ANGLES 30' UNLESS OTHERWISE SPECIFIED.
3) CASE HARDENED HI 500-550 HV WITH CASE DEPTH 0.13 TO 0.26
4) ALT. MATERIAL: MIM 9310 (AISI 9310 Equivalent).
HARDNESS 500-600 HV CASE DEPTH 0.1-0.3 mm

SR NO	DATE	AUTHORITY	BRIEF RECORD	ZONE	CD	GO SIGN
2	09/11/2015	M-29	DRG. REVISED			
1	14/07/2015	M-27	ALT. MATL. ADDED			

DRN PRANAV CHD

APPD
DATE 09/11/2015

SEALED
DATE

SCALE 2:1 EST MASS TITLE

MATERIAL
STEEL TO IS: 4432-1988, Gd 13Ni13Cr3 (En 36B)

PROTECTIVE FINISH

PHOSPHATED TO SPECN. IS: 3618-1966, CLASS 'B'

DESIGN AUTHORITY
ARDE

TRIGGER FRONT

DRG NO 0 2 0 4 0 3 0 2 0 2 1 8 0 0 1 0 0 D C
IC SS S AA A C SST

PART NO DS CAT NO AHSP

CONTROL COPY No. 1