DRG No.	0 2 0 4	0 3	0 4	0 0	0 1	0 0 9	0 0 D A
	IC	SS	C	AA	A	C	SST

GENERAL TOL. : FINE / MEDIUM / COARSE
CLASS TO IS: 2102

DRG. CONVENTIONS CONFIRM TO INDAN STANDARDS
DIMENSIONS ARE IN mm UNLESS OTHERWISE STATED.

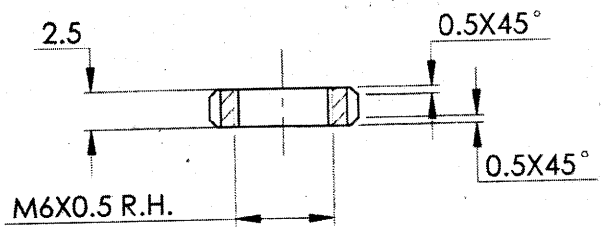

SECTION A-A

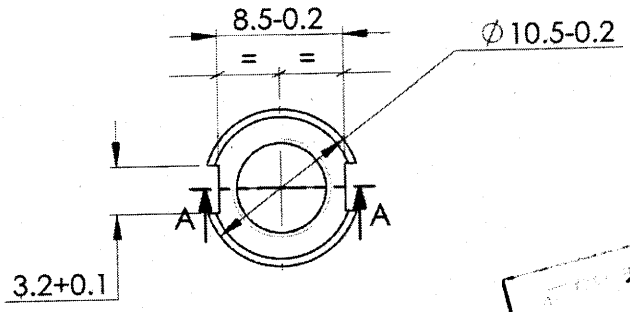

NOTES:-

1) REMOVE ALL SHARP EDGES AND BURRS.
2) DIMENSIONS ARE TO BE READ AS APPLIED AFTER PROTECTIVE COATING.
3) HARDNESS : 280-330 HV.
4) IF COMPONENT IS TO BE MANUFCTURED THROUGH MIM ROUTE REFER ARDE SPECN. No.DRDO/ARDE/MIM/TSP/051/2019.
5) ALT. PROTECTIVE COATING : PHOSPHATED TO SPECN. IS:3618-1966, CLASS 'B'

Sr. No.	DATE	AUTHORITY	BRIEF RECORD	ZONE	CD	GO
					SIGN	

DRN: SOURABH
SIGN:
DATE: 07/03/2019
CHECKED

MATERIAL:
STEEL TO IS: 5517-1993,Gd-42Cr4Mo2

APPD.
DATE:07/03/2019
FOR DIRECTOR

PROTECTIVE FINISH:
ELECTROLESS NICKEL-BORON NITRIDE (NiBN) COATING AS PER ARDE SPECN. NO: ARDE/SA/2016/COATING-02.

SEALED
DATE:

SHEET SIZE: A4
SCALE: 3:1

EST. MASS
0.96 gm

TITLE:

NUT PLAIN ROUND LOCK FORE SIGHT

DESIGN AUTHORITY
ARDE
PUNE 411021

DRG No.	0 2 0 4	0 3	0 4	0 0	0 1	0 0 9	0 0 D A
	IC	SS	S	AA	A	C	SST

JVPC	PART No.	DS CAT No.	AHSP