FOR EXPLANATION OF DIMENSIONING ETC., SEE CQA(I) GUIDE No. 001
THIRD ANGLE PROJECTION DIMENSIONS ARE IN MILLIMETERS.

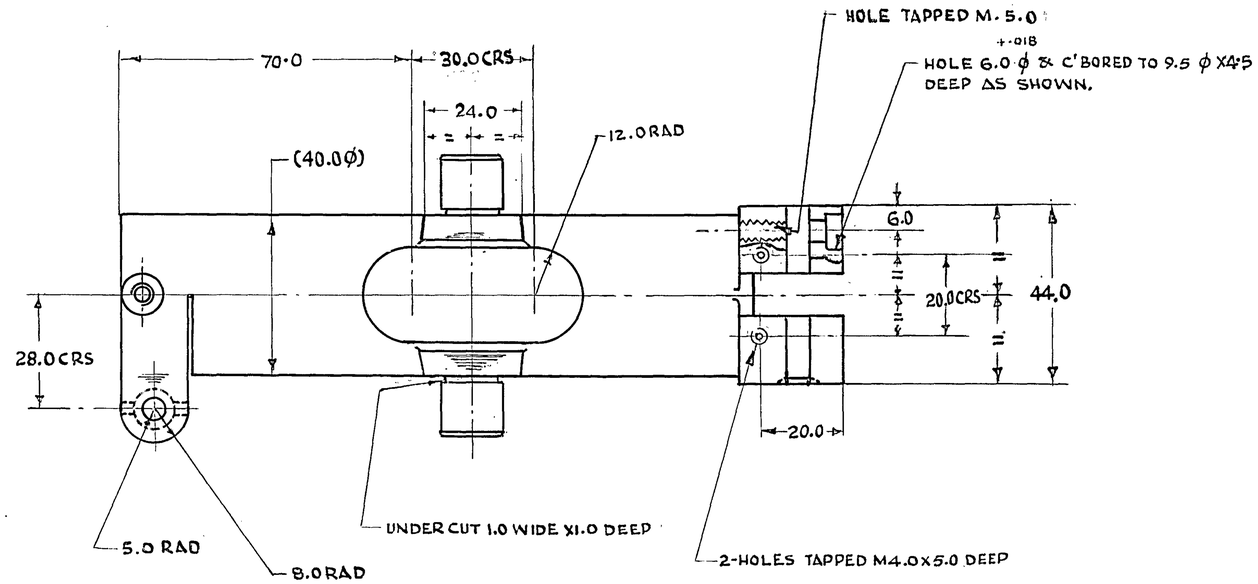

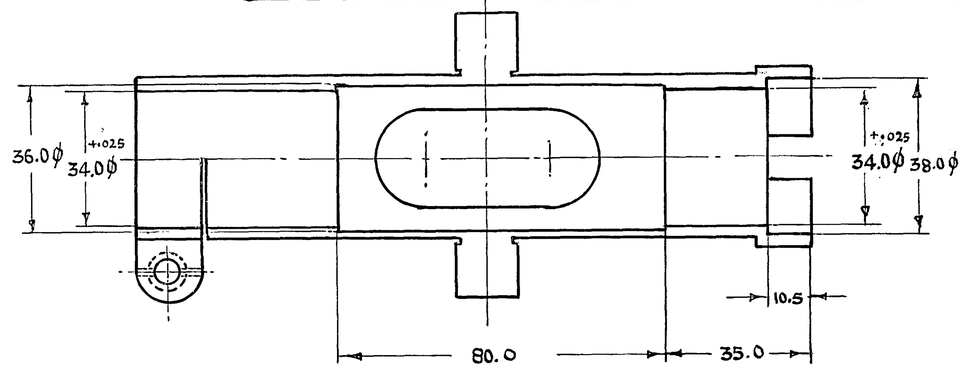

SECTION AT 'AA'

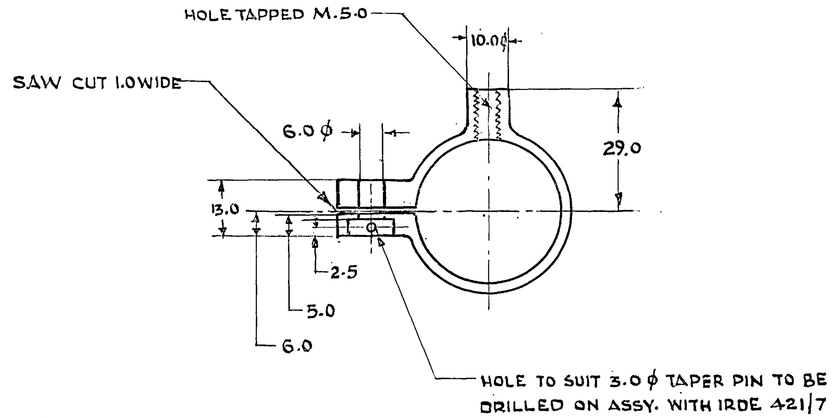

SECTION AT 'CDEF'

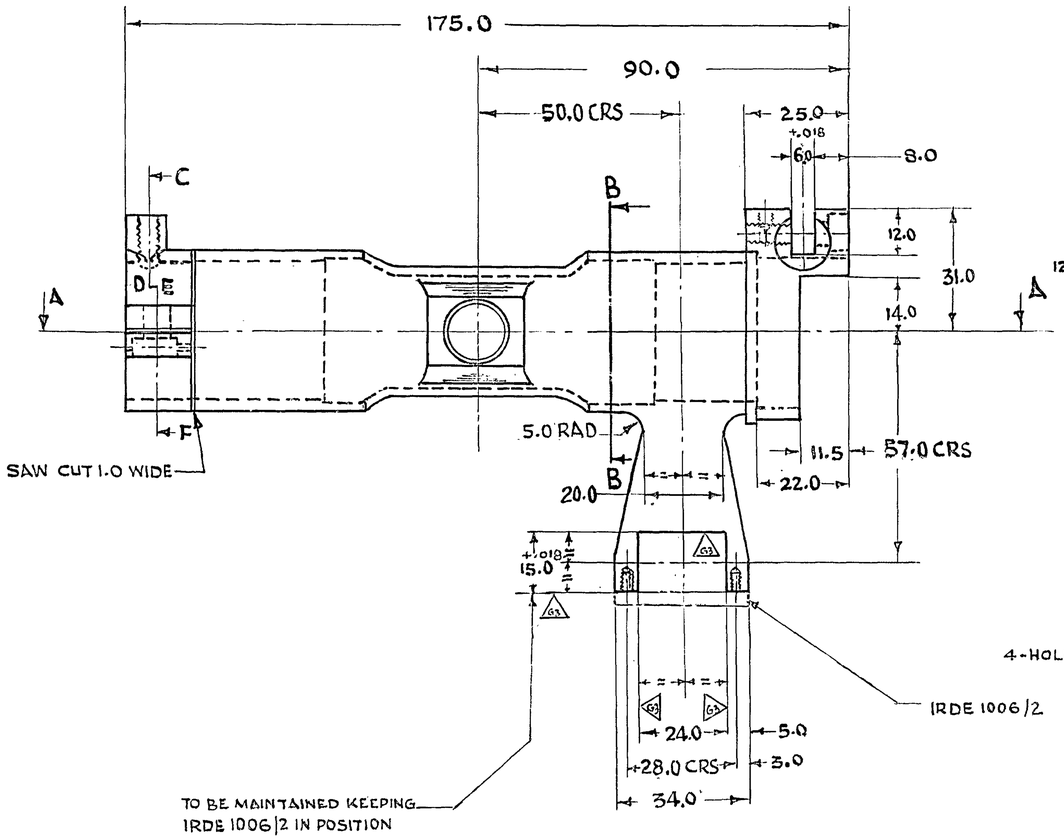

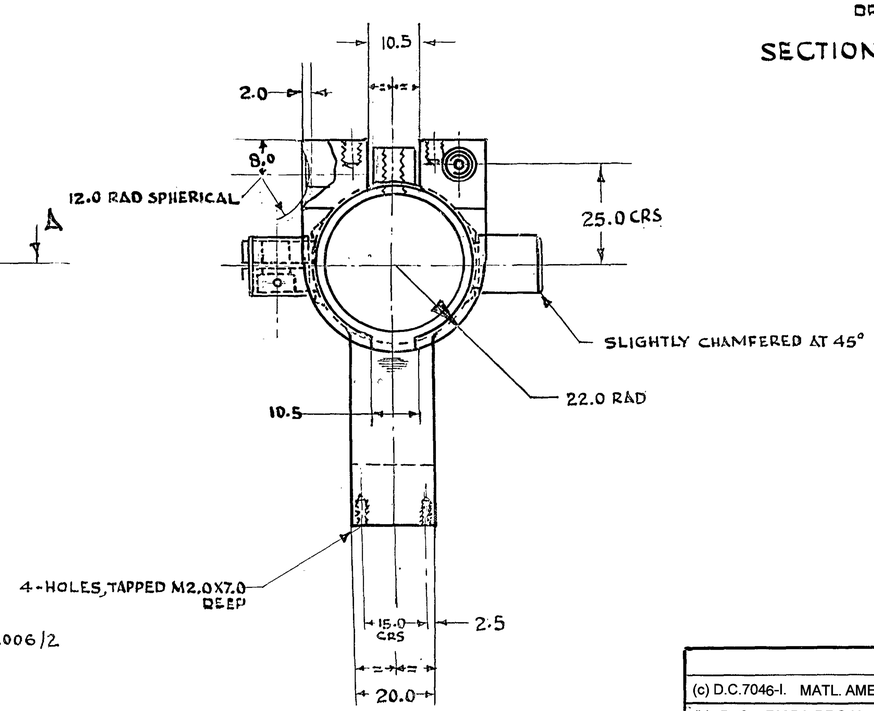

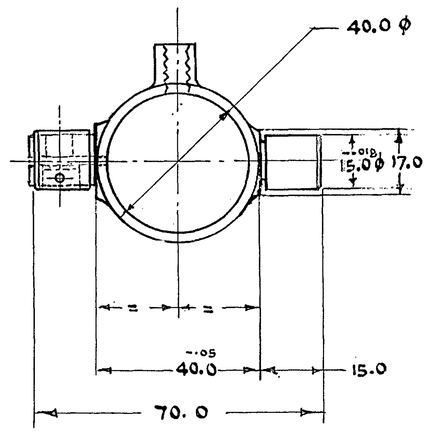

SECTION AT 'BB'

(c)

MATL :- STEEL 340-570 N IS:1030-1998

FINISH :- PHOSPHATISED & OUT SIDE TO BE PAINTED WITH LATEST APPROVED SERVICE COLOUR EXCEPT BEARING SURFACES.

(c) D.C.7046-I. MATL. AMENDED	sd/-	sd/-	20.10.11
(b) D. C. - 7025-I, DRG No. AMENDED.		sd/-	25.6.10
D.C.(I):-4501-I. HOLE TAPPED M5.0 WAS 8.0 DEEP & VIEWS AMENDED ACCORDINGLY.			3.12.82
D.C (I):-4476-I. DRG. RETRACED INCORPORATING ALL THE PREVIOUS AMENDMENTS & SEALED IN SUPERSESSION OF EXISTING ONE.			21-9-82
AMENDMENTS		SIG.	DATE

MATL :- SEE ON DRG.

FINISH :- SEE ON DRG.

BRACKET

DRAWN	TRACED	APPROVED
Sd/-	Sd/-	Sd/- FOR CONTROLLER CQA(I) DEHRADUN
CHECKED		
	Sd/-	

SCALE:- 1/1 DATE:- 4-8-72

DRAWING. No. (b)

CQA(I) 796/1

CAT PART No.

1240-000723

SHEETS SHEET

B.C. (I):- 0631-I-(P), 0823-I (P), 3115-I, 3185-I, 3229-I, 3799-I, 4476-I, 4501-I., 7025-I, 7046-I.

DRAWING TRACED AT C.I.I. DEHRADUN
TRACED BY :- [illegible]
CHECKED BY :- [illegible]
DATE :- 19.82. 14-3-82