PART No.
2A42.11.000 СБ
2 SHTS SHT-2

VIEW A
SHEET 1

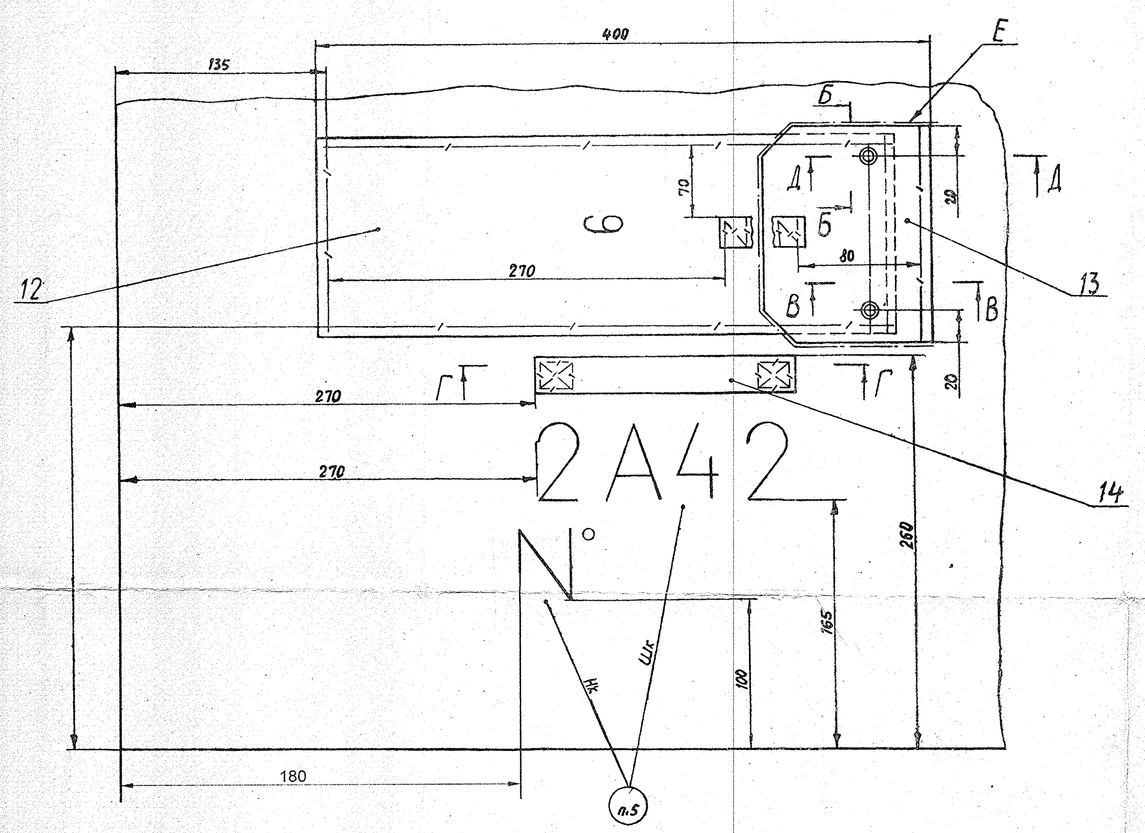

SEALING DIAGRAM OF POCKET No. 9

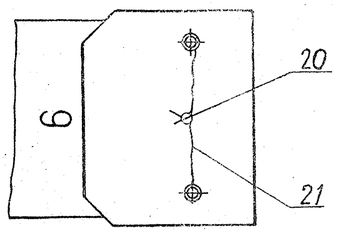

Г – Г
SCALE 1 : 1

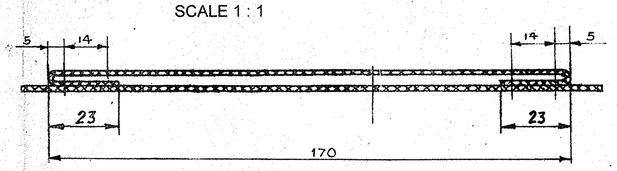

Б-Б
SCALE 1 : 1

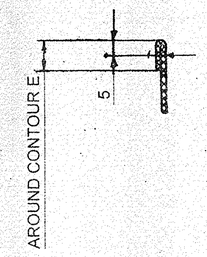

B -- B
SCALE 1 : 1

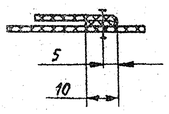

Д-Д
SCALE 1 : 1

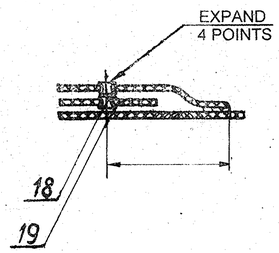

⑨ STOWAGE DIAGRAM OF SPTA SET IN BAG.

1. Pocket No.
2. Designation
3. Description
4. Return spring
5. Appliance for holding recoiling parts
6. Firing pin
7. Wire pin
8. Valve
9. Locking ring
10. Pin
11. Plunger
12. Spring
13. Spring
14. Spring
15. Spring
16. Spring
17. Spring
18. Spring
19. Detent
20. Lockpin
21. Lockpin
22. Lockpin
23. Lockpin
24. Lockpin
25. Cartridge catch
26. Brush, ГОСТ В 18651-73
27. Elbow brush, ГОСТ В 18646-73
28. Appliance for assembly of side positioners
29. Drift 3x50, ГОСТ В 18655-73
30. Drift 4x60, ГОСТ В 18655-73
31. Drift Ø5
32. Rod
33. Hammer
34. File 2820-0013, ГОСТ 1465-80
35. Drift 7x120, ГОСТ В 18655-73
36. Wiper, ГОСТ В 18647-73
37. Ejector
38. Appliance for removal of contactor
39. Disconnector
40. Plug
41. Hook, ГОСТ В 18652-73
42. Screwdriver 1-1-300, ГОСТ В 18650-73

AMENDMENT NOTICE No.
2A42-1074T-88 Dtd.11-12-87 (P-3 / 2869)

DATE	AUTHORITY	ZONE	AMENDMENTS	SIG AHSP	SIG. DO
30-8-06			SCANNED & PRINTED WITHOUT CHANGE		

PREV DC Nos:- 16407-W,17220-W & 18174-W Dt. 22-09-95

DRG SEALED;- 18174-W Dt. 22-09-95

DO CQA(W)

DRAWN:- | CHD:- | ASSY DRG:-
SCANNED:- PKA | CHD:- | DATE:-
C/D'MAN | DO | AHSP | FOR CQA(W) | SCALE:-
ESTD mass:-
MATERIAL:-
PROTECTIVE FINISH:-

SPTA BAG ASSY. DRG.

CQA(W), JABALPU

DESIGN No.
PART No. 2A42.11.000 C
2 SHTS SHT
DS CAT No.

6/8

Negative prepa