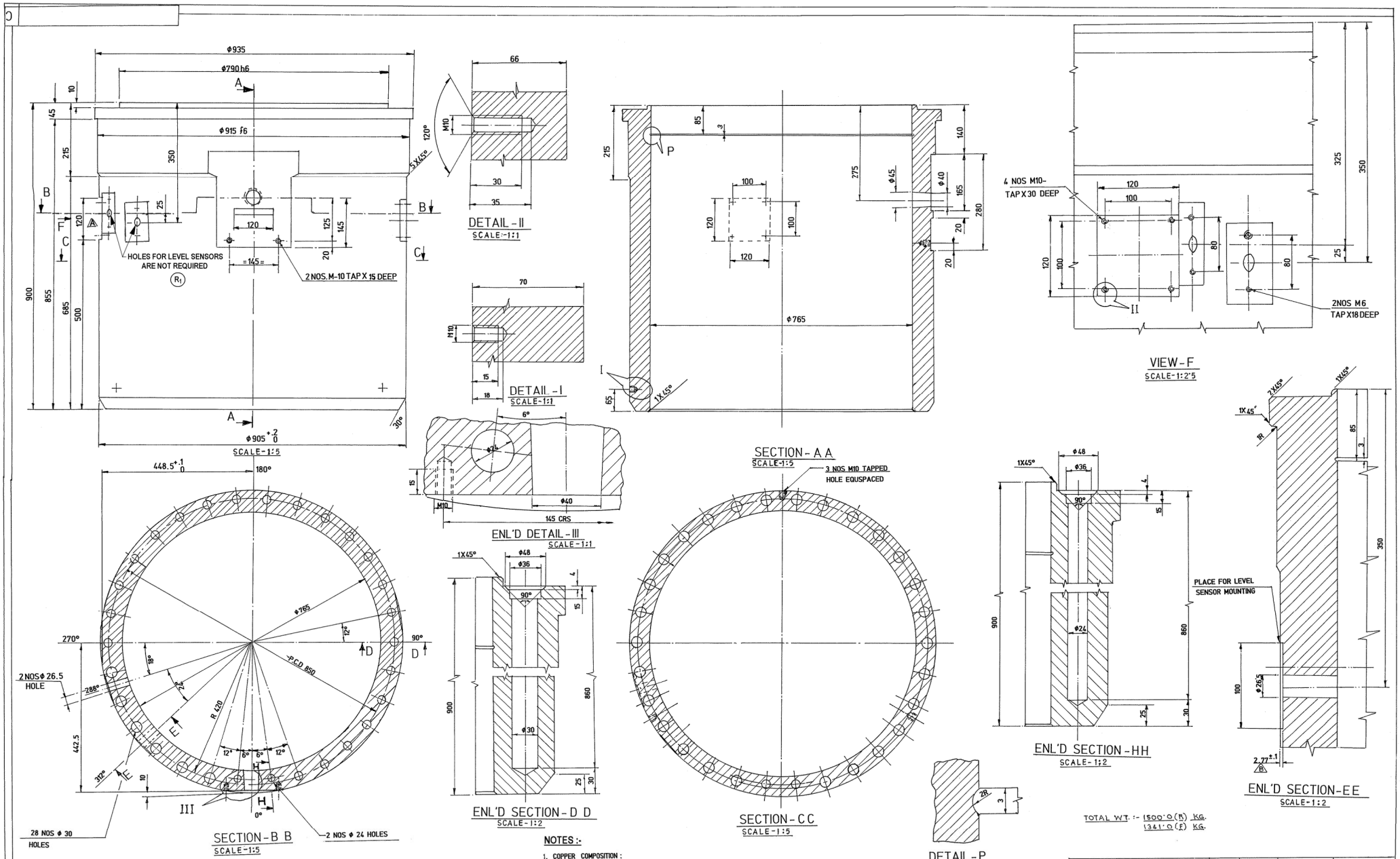

TOTAL WT. :- 1500.0 (R) KG.
1341.0 (F) KG.

NOTES :-

1. COPPER COMPOSITION :

MATERIAL : Cu Ag		ELECTRICAL CONDUCTIVITY :	55 m/ohm Sq. mm.
Ag	: 0.09		0.2% PROOFSTRESS 200 TO 245N/Sq. m
△ P	: 0.006	TENSILE STRENGTH	: 240 TO 255 N/Sq. mm.
Cu	: BALANCE	ELONGATION	: 12% TO 18%
		HARDNESS	: BHN 75 - 80
		THERMAL CONDUCTIVITY :	370 W/mk.

2. MACHINING ALL OVER / REMOVE ALL SHARP EDGES.
3. COOLING SYSTEM TO BE TESTED UNDER WATER / KEROSENE PRESSURE 1 Mpa
4. THE COPPER MOULD TO BE FORGED, FINISH MACHINED WITH UNIFORM THICKNESS THROUGH OUT THE LENGTH +/-01 mm. AND ULTRASONICALLY TESTED AS PER ASTM B 548-76, ASTM E 214-63, ASTM E 114-63.

NO.	DATE	ZONE	REMARKS
C	05.07.93		MATERIAL COMPOSITION ADDED AS PER MOM DATED 9.4.93
B	23.3.93	GEN	DIMENSION ADDED
A	12.2.93	GEN	PWI/ ELMET'S COMMENTS WITH POINTS (1-2) INCORPORATED.

REVISION

ITEM NO	DESCRIPTION & FINAL DIMENSIONS	NO.OFF	MATERIAL	HARDNESS	REMARKS
	R2 NOTE NO. 4 ADDED, REF. MEMO NO. ESR/DRG/8429/2012 dt. 15-3-2012				
	R1 HOLES FOR LEVEL SENSORS ARE NOT REQUIRED - ADDED VIDE REF. MEMO NO. NIL DATED 06-6-2011				
	NOTE DELETED AUTH. MEMO NO. 267/SMR/ESR/01				

DESCRIPTION OF AMENTS

DESCRIPTION: ESR MOULD (750mm DIA)

INDEX

~CLEANING
▽ROUGHING
▽▽SMOOTHING
▽▽▽FINISHING

SCALE	DRAWN	DATE	NAME	ZONE
1:1, 1:2, 1:2.5, 1:5, 5:1	TRACED 5.12.01	B.B.DAS		
	CHECKED			
	APPROVED HDS/DD	JLGM/E-T		

METAL & STEEL FACTORY, ISHAPORE DRG.NO-ESR/1000/19 R2

PV COPY

BASED ON DRG.NO. M1-2572-ER-15A-G1.01 (REV 'C')

BASED ON DRG.NO - M1-2572-ER-15A-G1 (REV 'C')