ASHOK LEYLAND

FIRST ANGLE PROJECTION

SURFACE FINISH AS PER IS.3073(CLA VALUE)

COMPUTERISED DRAWING DO NOT CHANGE MANUALLY

MICRONCHES	MICROMETRES
BELOW 8	BELOW 0.2
8-16	0.2 - 0.4
16-32	0.4 - 0.8
32-64	0.8 - 1.6
64-125	1.6 - 3.2
125-250	3.2 - 6.4

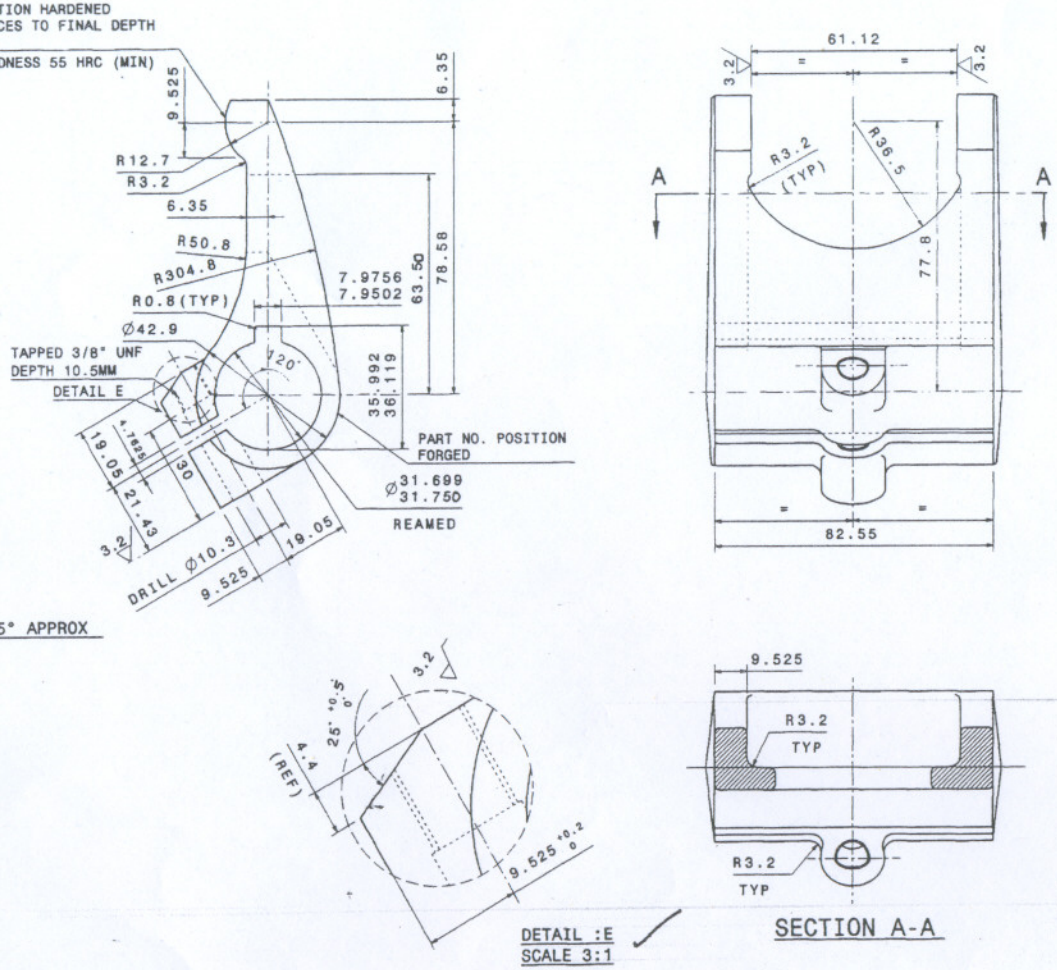

ALTERATIONS	EDM DATE	GRADE	SUFFIX	MICRO FILMED

STAGE	CHECKED DATE	APPROVED DATE	ALTERATION LEVEL
I			#
II			
III			

DRAWN DATE	8-8-06 24.2.06	RETRACED CHECKED	
CHECKED DATE		MED APPROVAL DATE	Bracks 24/2/06
APPROVED DATE		STDS APPROVAL DATE	

MATERIAL EN8D TO BS 970/CK45 DIN 17200 (080 A42)

HEAT TREATMENT SEE DRG

REMARKS FOR 14" RDC CLUTCH/HYDRAULIC CWG

DESCRIPTION COP LEVER-INNER

PART NO. F 2 4 1 9 8 1 1 #

SHEET NO. 01 OF 01

Ⓢ - SAFETY CHARACTERISTICS

Ⓒ - CRITICAL CHARACTERISTICS

Ⓘ - IMPORTANT CHARACTERISTICS

UNLESS OTHERWISE SPECIFIED

SURFACE PROTECTION: FABRICATED COMPONENTS TO BE PHOSPHATED TO CLASS 'C' AS PER IS:3618 AND APPLIED IMMEDIATELY WITH FED OXIDE ZINC CHROMATE PRIMER TO IS.2074. MACHINED SURFACE TO BE APPLIED WITH RUST PREVENTIVE OIL TO IS.1154

MACHINING TOLERANCE FOR OPEN DIMENSIONS WILL BE AS PER IS:2102

DIMN	OVER	-	6	30	120	315	1000	2000	> 4000
	UPTO & INCLDG	6	30	120	315	1000	2000	4000	—
TOLERANCE		± 0.1	± 0.2	± 0.3	± 0.5	± 0.8	± 1.2	± 2	± 3

SHARP EDGES TO BE REMOVED

DO NOT SCALE DRAWING

DIMENSIONS ARE IN MM

ANGULAR TOLERANCE AS PER IS:2102

METRIC SCREW THREADS SHALL CONFORM TO THE LATEST AND TOLERANCES SPECIFIED IN THE CURRENT ISSUE OF CLASS 6G EXTERNAL OR 5H INTERNAL

SPECIAL INSTRUCTIONS/NOTE:

NOTE:-
THIS IS SAME AS COP LEVER INNER TO AL PART NO F2443811 EXCEPT FOR THE DIMENSIONS SHOWN IN DETAIL VIEW "E"

SL NO	PART NO:	DESCRIPTION	SIZE	MATERIAL	QTY

BILL OF MATERIALS

REF PT NO:	F2443811	SSUED UNDER		MICRO FILMED	
SUPERSEDES	----	EDM/BM	DATE	BY	
S/A PT NO:		010677	19.06.2006	DATE	
WEIGHT	ROUGH / FINISH / ADD GRAMS	SUPPLIER'S DRAWING APPROVAL REQUIRED		YES / NO	
SCALE	NTS	APPROVAL NO. -----			
SPEC NO	ALCWG19/13	TEST NO. -----			

This drawing is strictly private and confidential. It is the exclusive property of ASHOK LEYLAND Ltd., and must not be used, copied or reproduced in part or whole without the company's written permission.

ASHOK LEYLAND LTD.
TECHNICAL CENTRE VELLIVOYALCHAVADI