DRAWING NUMBER 172.01.640-4 SHEET No. 1 OF 1

DRG. INDIANISED BASED ON RUSSIAN ORIGINAL ISSUE-9

COMMON TO T-72 & BLT

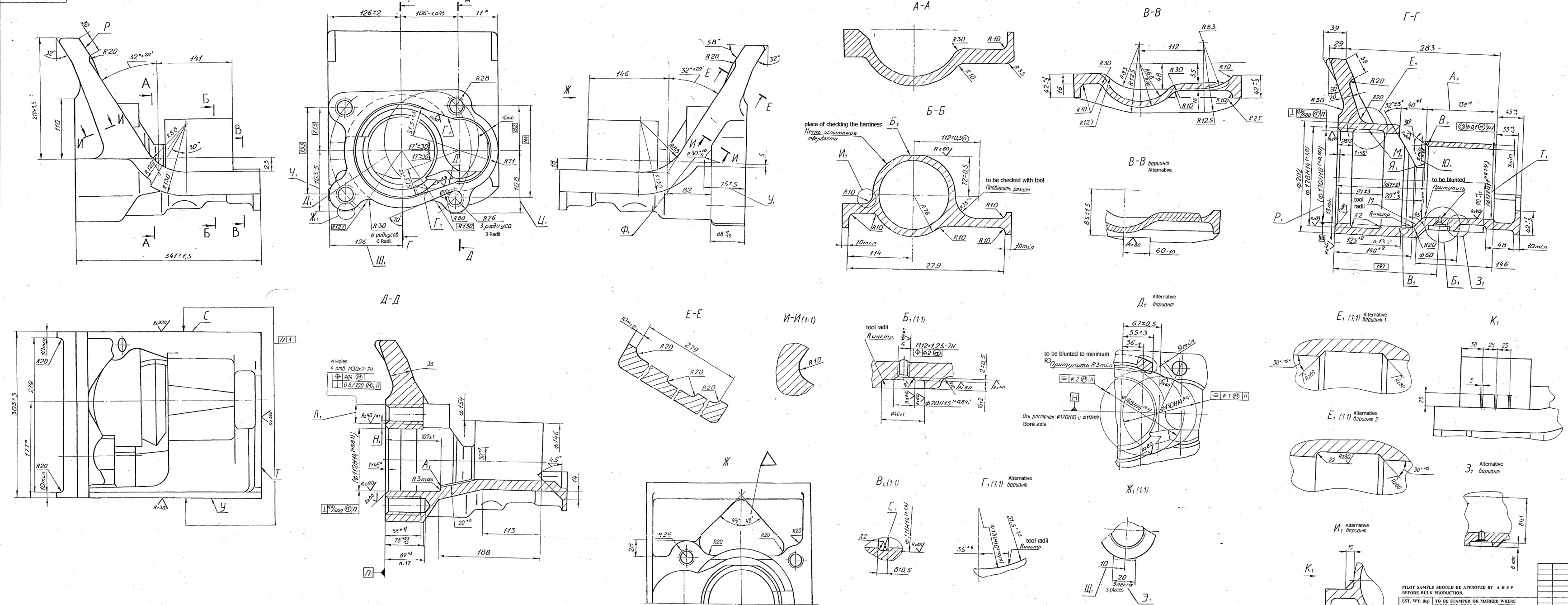

1. Grade of steel heat treatment method of acceptance and testing should comply with the list for components made out of special steel . Hardness medium.
2. Accuracy of casting 11T-0-0-9 GOST 26645-85.
3. Requirements for casting as per 172 .TY5.
   In not easily accesible places and in mating places , burn -on (sand buckle) are allowed.
4. External draft 1:50.
5. Dimension given in brackets are after welding the bracket on hull.
7. Decrease of minor diameter of thread $Л_1$ is allowed by $0^{+0.2}$ mm (see Д-Д) above the tolerence and screwing in of no-go gauge to a depth not more than 8mm is allowed.
8. On surfaces M and M_1(see Г-Г) shoulder by 0^{+1} mm is allowed.
12. Dimension H_1(see Д-Д) for holes $Л_1$ should not be less than 7mm over distance of 10mm from surface П for the rest of the length not less than 9mm is allowed.
13. Dimension P_1 (see Г-Г) with surface finishing Rz=40 microns is to be maintained over the length of 125^{+2}mm, for the rest of the length 168H14$^{(+1)}$ mm is allowed with surface finishing Rz=80 microns ; in this case groove C_1 (see B_1) may not be made.
14. Dimension T_1 is to be checked at a distance of not less than 321 mm from surface П (see Г-Г).
15. On surface П (see Д-Д) tool marks are allowed by $0^{+0.2}$ mm.
16. After removing technological lug shoulder between machined and casting surfaces are allowed by 0^{+6} mm and incision in body as per dimension Y_1 and $Ф_1$ (see view from the left) are allowed.
17. coming out of the drill to thread $Л_1$ (see Д-Д) to the outside is allowed.
18. On surface P (see view from the right) technological allowance is allowed by 0^{+10}mm.
19. Once in a month components is to be checked at random as per weight. Maximum permissible weight is 47.3 kg.
20. *Dimension for reference.
21. On surfaces C ,T ,Y , (see top view) section without rectifying the casting surfaces with total area of not more than 25% are allowed.
22. Lugs designated with dot and dash lines may be made with dimension $Ц_1$, $Ч_1$, $Ш_1$(see main view) and $Щ_1$,$Э_1$ (see $Ж_1$) may be made along the entire length of bosses.
23. Value of shoulder A_1(see Д-Д) need not be checked .
24. Other requirements as per 520 TY1.
25. *¹Dimension and surfaces finishing are to be ensured by tool.
26. For ensuring dimension $Ю_1$ machining of surfaces $Я_1$ (see Г-Г) is allowed with surface finishing Rz=80 microns within the limits of tolerence zone for dimension A_2
27. During coming out of surface $Б_2$(see view from the right) to surfaces of chamfer B_2(see Г-Г) local incision along face $Я_1$ is allowed.
    Edge of incision is to be blunted upto dimension $Ю_1$ in this case width of chamfer B_2 in place of incision should be not less than 6mm.
28. On surfaces $Г_2$ and $Д_2$ (see main view) black spots are allowed by not exceeding 1/3rd of the total area.

172 01 240 CB-4CB

PILOT SAMPLE SHOULD BE APPROVED BY A H S P BEFORE BULK PRODUCTION.

EST. WT. (kg)	TO BE STAMPED OR MARKED WHERE INDICATED THUS # (LETTERS)
44	

ALL SHARP EDGES AND CORNERS TO BE REMOVED UNLESS OTHERWISE STATED MACHINED CORNERS TO HAVE R OUT-SIDE R INSIDE EQUIVALENT CHAMFERS ARE PERMISSIBLE.

ISSUE	DATE	NATURE OF AMENDMENTS
9A	12.01.08	57202/CQA(HV)/DB-1/T90/01/AMDT

DRN	[signature]
CHD	B. [signature]
APPD	[signature]
DATE	21/6-03
SCALE:- 1 : 2	
DIMENSIONS IN mm	
TOLERANCE ON DIMNS UNLESS OTHERWISE STATED IS : 2102 - 69	
ALL THREADS TO CONFORM TO	

MATERIAL :- SPECIAL STEEL

USED ON :- (9A) 172.01.240cb-7Cb 172.01.240cb-4Cb

CONTROLLERATE OF QUALITY ASSURANCE (HEAVY VEHICLES) AVADI

TITLE :- 5th L.H AND R.H SUPPORT OF ROAD WHEEL ARM

D S CAT NUMBER

DRAWING NUMBER 172.01.640-4

356 SUPPLY CODE U-01-1-2 D90037

SIZE A2x4