PART Nº
IQX 310
D.C.I. 26194-A.

DRG. CONVENTIONS AS PER IS SPECIFICATIONS
GEN. TOL. MEDIUM CLASS TO IS 2102-1969, DIMENSIONS ARE IN MM.

TECHNICAL REQUIREMENTS SPEC. CQA(A) 1803 (E)

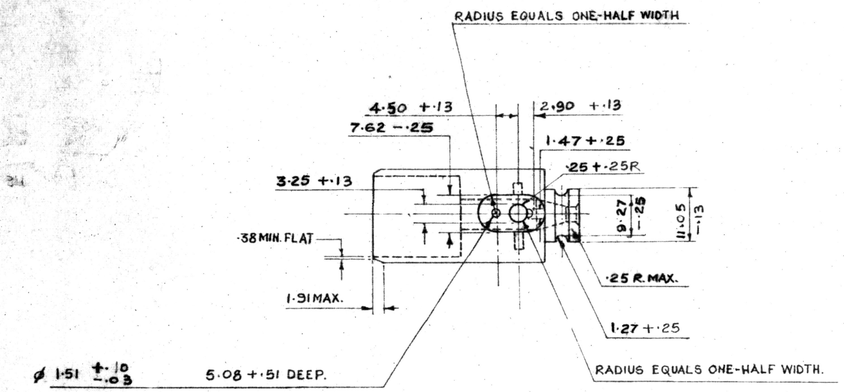

MATERIAL

ZINC BASE ALLOY TO IS 742-1981 ALLOY 'A' DIECAST TO JSS 0464-01 (SEP. 86) CLASS I OR ALUMINIUM ALLOY TO IS 617: 1975 AMD 3 (RA 91) DESIGNATION 4223 WP DIECAST TO JSS 9530-01 (FEB. 83) CLASS I

PROTECTIVE FINISH:-

FOR ZINC MATERIAL CROMATE PASSIVATION TO IS 1340: 1977 & FOR ALUMINIUM ANODISING TO DEF 151 TYPE 2.

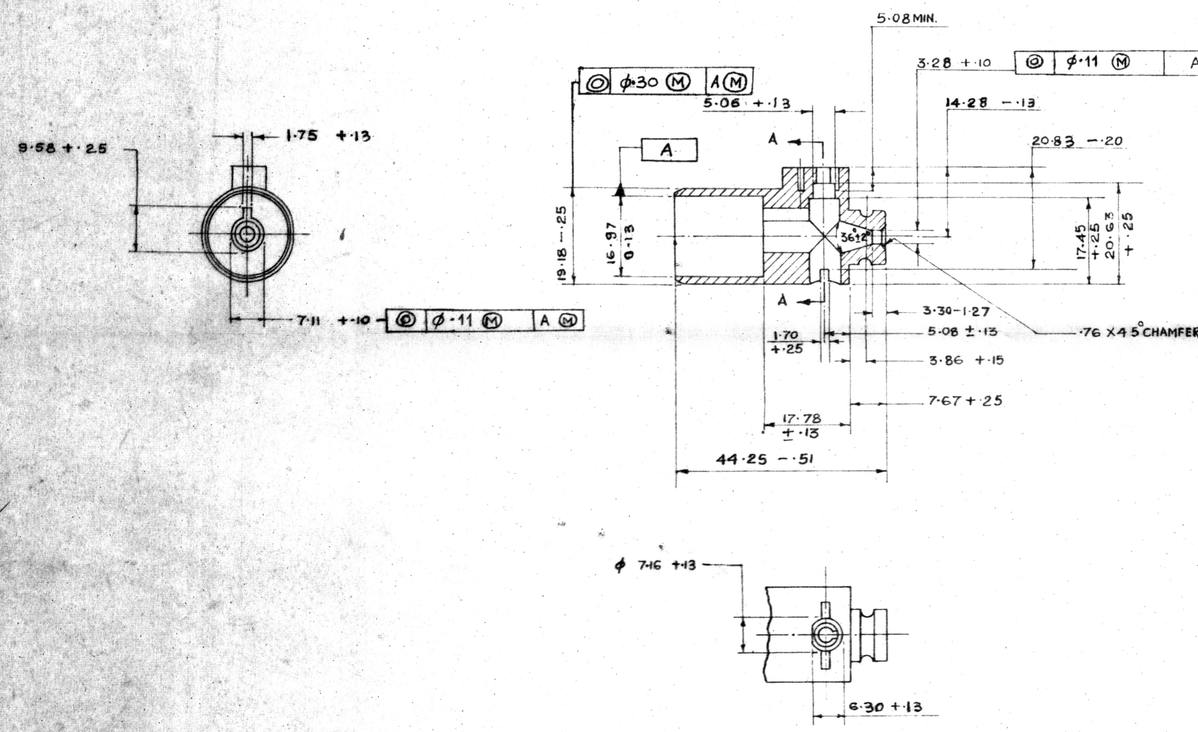

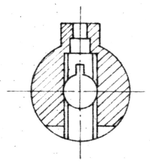

SECTION A-A.

DATE	AUTHORITY	ZONE	NATURE AMENDMENTS	SIG. AHSP.	SIG. D.O.
28-1-05	DCI 36997-A.		MASTER COPY REPLACED IN SUPERSESSION OF EXISTING DILAPIATED COPY OF SAME NO.		
10-4-03			SCANNED WITHOUT CHANGE.		
2-9-93	DC-35573-A		VARIOUS DIMENSIONS AMENDED, TECHNICAL DETAILS INBOX ADDED & AMENDED, PROTECTIVE FINISH NOTE & GEN. TOL. NOTE ADDED, MATERIAL NOTE AMENDED.		
19-7-91	D.C. 35137-A		ALT. MATL. SPECN. ADDED & AMENDED.		
12-11-90	DC-34967-A		MATERIAL SPEC. AMENDED & ASSLY. DRG. NO ADDED		
24-4-78	DCI. 32807-A		DIMNS. 1·753 ± ·127 & 3·30 − 1·27 WERE 1·727 +·12 & 3·30 − ·127 RESP.		
16-9-74	DCI. 31183-A		DRG. CONVERTED TO SI UNITS		
15-6-74			RETRACED WITHOUT CHANGE.		
			PREVIOUS D.C.I.(I) Nº: 26194-A, 26323-A, 26598-A, 26761-A, 26931-A, 26962-A, 27573-A, 28860-A, 29665-A, & 30037-A.		SDP

DRG. SEALED:- 24-4-62

D.O.C.I.(A).

PROTECTIVE FINISH:- AS ABOVE.

MATERIAL:- AS ABOVE.

ESTIMATED MASS:- 32 g.

SCALE:- NTS

HEAD

ASSY. DRG. IQX 18A
GAUGE SCHD:- I 1093
DRAWN | CHECKED | TRACED | TRN. CHD.
CHIEF D'MAN. | GROUP OFFICER
D.O. CQA(A)
APPROVED
FOR CQA(A)
DATE:- 8-9-61
DESIGNER'S REF. 1.A.1901 | 19 SHEETS | SHEET 4
BASED ON DRG. D/7548292
PART Nº
IQX 310
CQA(A). KIRKEE.