DRG. NO. RV-03/15,16,17 SW

D.A. NO.

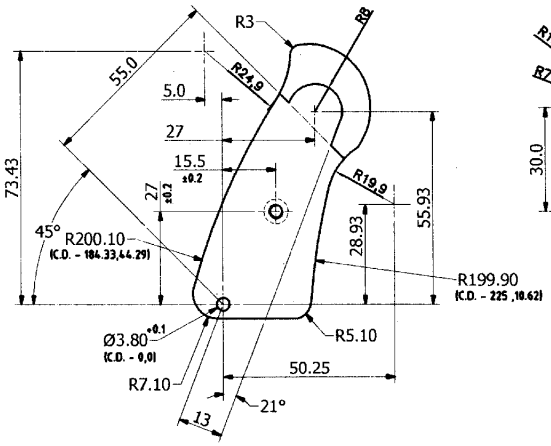

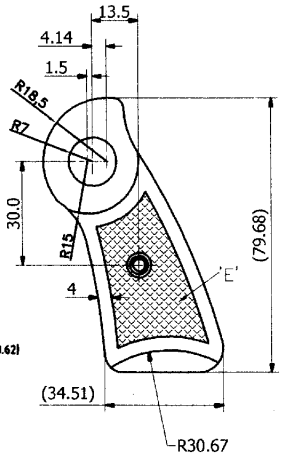

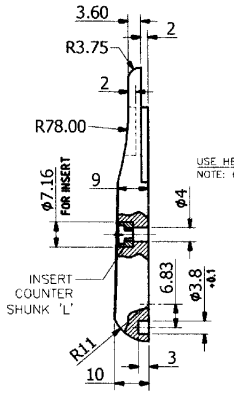

GRIP PANEL LEFT
(DRG.NO. RV-03/15 SW)

GRIP PANEL RIGHT
(DRG.NO. RV-03/16 SW)

LOGO
(REGISTERED TRADEMARK OF SAF)

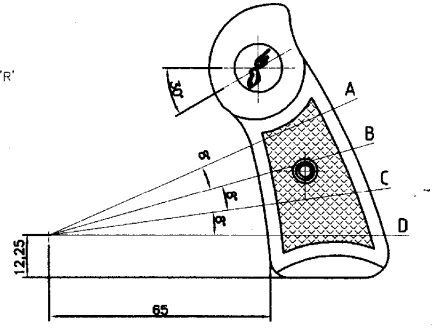

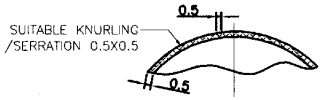

DETAIL VIEW 'E'

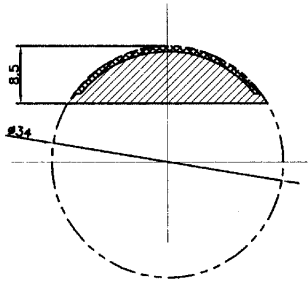

SECTION A-A

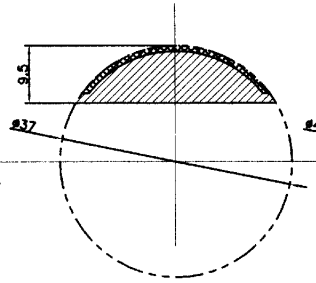

SECTION B-B

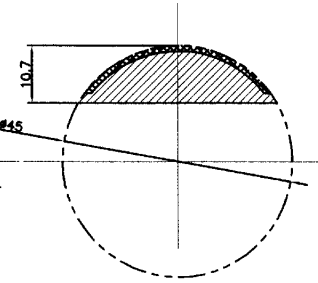

SECTION C-C

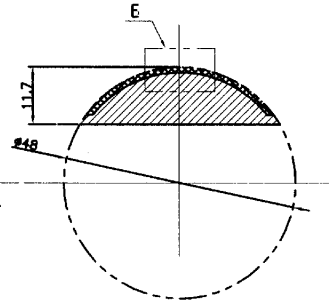

SECTION D-D

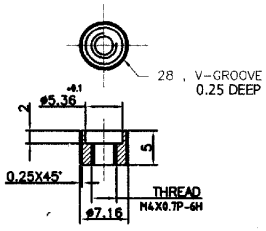

INSERT COUNTER SHUNK 'L'

MATL.:- STEEL BS 970 Pt.1:1983 Gd.070M20
PROTECTIVE FINISH:- PHOSPHATED TO SPECN. JSS-0465-01:1988 CLASS II (ACCELERATED) OIL FINISH.

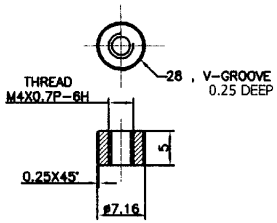

INSERT 'R'

MATL.:- STEEL BS 970 Pt.1:1983 Gd.070M55
PROTECTIVE FINISH:- PHOSPHATED TO SPECN. JSS-0465-01:1988 CLASS II (ACCELERATED) OIL FINISH.

MATERIAL.:- SEASONED SHISHAM WOOD (GOOD QUALITY) WITH WOODEN POLISH

FINISH:- DULL VARNISH / POLISH

DIMENSIONS ARE IN mm. UNLESS OTHERWISE STATED.

TOL.:- ±0.2 FOR ALL PROFILES & RADIUS

NOTE:- (i) MATERIAL OF LOGO IS BRASS WITH POLISH FINISH & PASTE WITH SUITABLE ADHESIVE.

(ii) SCREW GRIP PANELS (DRG.NO. RV-03/17 SW) OF STEEL (THREAD M4X0.7P-6g) SHOULD BE PROVIDED WITH GRIPS. (LENGTH-25mm)

(iii) BEFORE BULK PRODUCTION, CLEARANCE WILL BE GIVEN, PILOT BATCH OF 10 SETS (GRIP LEFT,GRIP RIGHT & SCREW) WILL BE REQUIRED TO BE SUBMITTED ALONG WITH THE DIMENSIONAL & MATERIAL TEST REPORT. IF THE PILOT BATCH IS NOT ACCEPTABLE FURTHER BATCHES OF 10 EACH WILL BE REQUIRED TILL CLEARANCE IS GIVEN TO START BULK PRODUCTION.

(iv) NO NEED OF ISSUE THE INDIVIDUAL DRAWINGS OF RV-03/15SW, RV-03/16SW & RV-03/17SW BECAUSE THIS SUB ASSEMBLY DRAWING IS COMPLETE FOR ABOVE MENTIONED DRAWINGS.

REVOLVER .32 SIDE SWING GRIP SUB ASSEMBLY FOR BODY ASSY., RV-03SW of GRIP PANEL LEFT (DRG.NO. RV-03/15 SW) GRIP PANEL RIGHT (DRG.NO. RV-03/16 SW) SCREW GRIP PANEL (DRG.NO. RV-03/17 SW)	DESIGNED BY	A.S.RANA
	CHECKED BY	JWM/DDO
	APPROVED BY	WM/DOO
	DATE	22.07.2021
SCALE 1 : 1 & (NTS)	SMALL ARMS FACTORY KANPUR	DRAWING NO. RV-03/15,16,17 SW
		SHEET 1 OF 1

Folio No. 7015008590