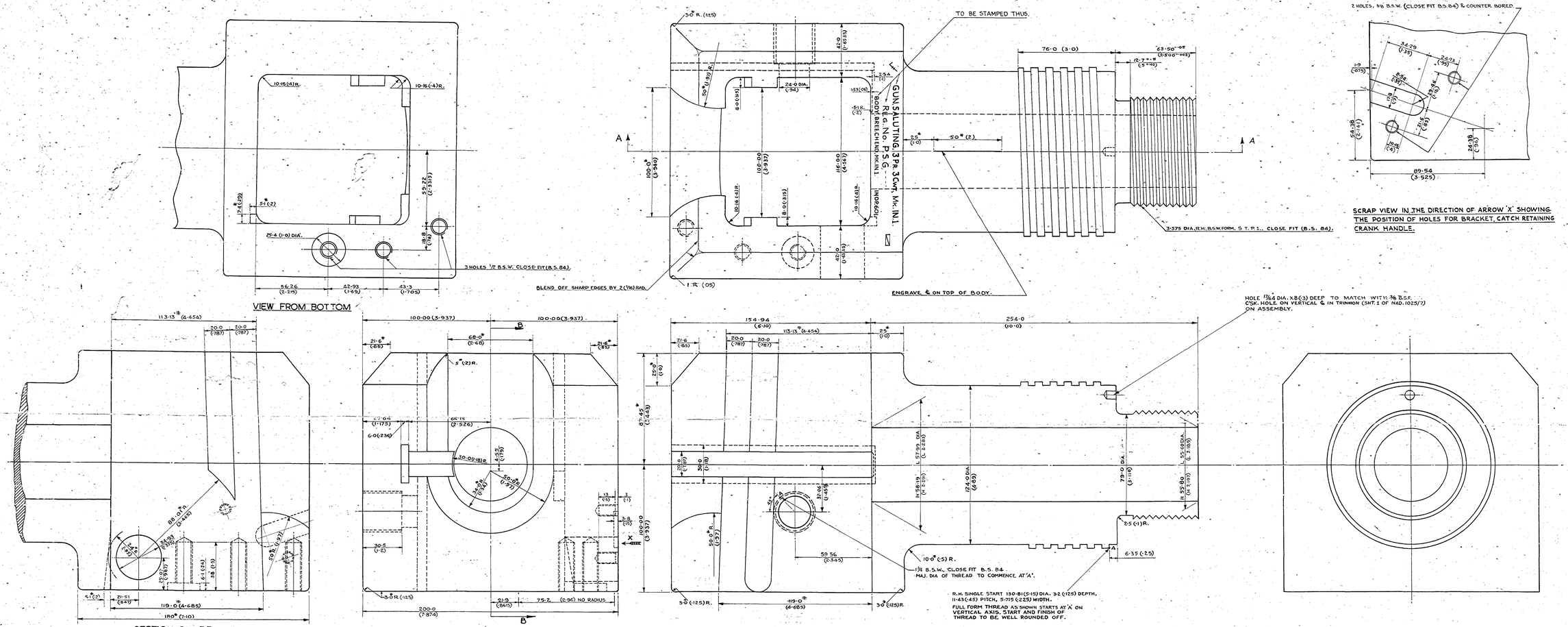

SCRAP VIEW IN THE DIRECTION OF ARROW 'X' SHOWING THE POSITION OF HOLES FOR BRACKET, CATCH RETAINING CRANK HANDLE.

DCA No. 1010015387

TOLERANCES ALLOWED EXCEPT WHERE OTHERWISE STATED.

1. FOR SURFACES IN CONTACT :-
   - ·05 (-·002) ON THE MALE DIMENSIONS.
   + ·05 (+·002) ON THE FEMALE DIMENSIONS.
2. FOR SURFACES NOT IN CONTACT (GOVERNING STARRED DIMENSIONS*):-
   (a) FOR DIMENSIONS BELOW 100·0 (4·0).
   - ·20 (-·008) ON MALE DIMENSIONS.
   + ·20 (+·008) ON FEMALE DIMENSIONS.
   (b) FOR DIMENSIONS 100·0 (4·0) & ABOVE.
   - ·002 PER MM. (-·002 PER INCH) ON MALE DIMENSIONS.
   + ·002 PER MM. (+·002 PER INCH) ON FEMALE DIMENSIONS.

* ADDITION TO TOLERANCE NOTE

3 THE CLEARANCE BETWEEN THE FACE OF A MODEL WEDGE AND A CARTRIDGE CASE TO HIGH LIMIT AS TO RIM VIZ.:- H 4·44 (·163) MUST BE WITHIN THE LIMITS H ·254 (·010) L ·13 (·005).

4 IN ADDITION, WHEN A WEDGE IS SUPPLIED AS A COMPONENT OF THE GUN THE CLEARANCE BETWEEN ITS FACE AND A CARTRIDGE CASE TO HIGH LIMIT AS TO RIM VIZ.- H 4·14 (·163) MUST BE WITHIN THE LIMITS H ·33 (·013) L ·13 (·005)

TO BE STAMPED WHERE INDICATED THUS:-

✓ CONTRACTOR'S INITIALS.
▭ YEAR OF MANUFACTURE.

GUN SALUTING, 3PR., 3CWT., (PORTABLE SALUTING GUN).

BODY, BREECH END, MK. I.N.1.

APPROVED:- 18-11-61.

AMENDMENTS.

DATE & AUTHY.	NATURE	SIG.
ARD.1818 3-3-71	NOTE "HOLE 17/64 DIA. X 8 (3) DEEP TO MATCH WITH 3/8 B.S.F. C'SK. HOLE ON VERTICAL ℄ IN TRUNNION (SHT. 2 OF NAD. 1025/7) ON ASSEMBLY" AMENDED TO READ "HOLE 17/64 DIA. . . . . IN TRUNNION (SHT. 1 OF NAD. 1025/7) ON ASSEMBLY"	
ARD 2931 17-1-73	DCA No. ADDED	

THIRD ANGLE PROJECTION.

NAD. 1025/2.

SHEET 1 OF 2 SHEETS.
BASED ON N.O.D. 3209/3 DT. 2-9-57 & R.G.F. 10819/54 DT. 19-5-37.

DIMENSIONS ARE IN MILLIMETRES EXCEPT WHERE OTHERWISE STATED AND ARE THE NEAREST ACCEPTABLE EQUIVALENTS OF INCH DIMENSIONS SHOWN IN BRACKETS.

STORE REF.:- IN DP. 6.0	SCALE:- FULL SIZE.
MATL:- STEEL, GROUP 3 B/0070 (LATEST).	PROTECTIVE FINISH PHOSPHATE/OIL. SPECS K.1277 LATEST
TOLERANCES:- AS SHOWN.	GAUGE SCHEDULE:- NAD. 1025.

DIRECTORATE OF NAVAL ARMAMENT INSPECTION
N.HQ., NEW DELHI.

DRAWN.	TRACED.	CHECKED.

DATE OF DRAWING.	PASSED.
18-11-61	
3-3-71	
17.1.73	APPROVED. CAPT. I.N. D.N.A.I.

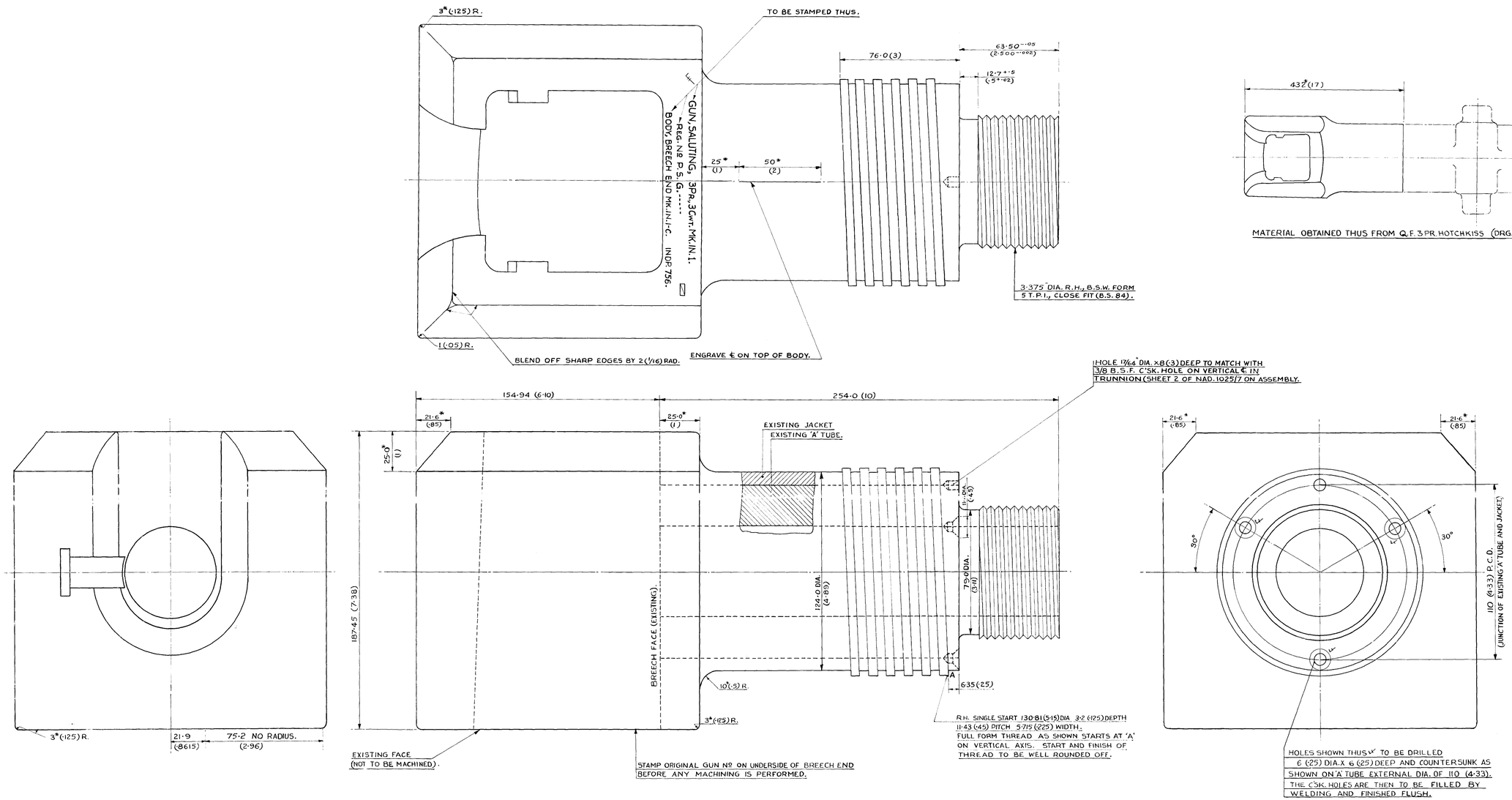

APPROVED:- 28·12·61.		
AMENDMENTS.		
DATE & AUTHY.	NATURE.	SIG.

THIRD ANGLE PROJECTION.

NAD. 1025/2.

SHEET 2 OF 2 SHEETS.

BASED ON N.O.D. 3209/3 DT. 2·9·57.

DIMENSIONS ARE IN MILLIMETRES EXCEPT WHERE OTHERWISE STATED AND ARE THE NEAREST ACCEPTABLE EQUIVALENTS OF INCH DIMENSIONS SHOWN IN BRACKETS.

SCALE:- 1/1.	TOLERANCES:- AS SHOWN.
STORE REF.:- INDP. 756.	GAUGE SH.:- NAD. 1025.
PROTECTIVE FINISH:- PHOSPHATE/OIL SPECN: K. 1277 LATEST.	MATERIAL:- AS SHOWN.

DIRECTORATE OF NAVAL ARMAMENT INSPECTION
N. HQ., NEW DELHI.

DRAWN.	TRACED.	CHECKED.

DATE OF DRAWING.	PASSED.
28·12·61.	G.D.O.
	APPROVED.
	CAPT. I.N. D.N.A.I.

TOLERANCES ALLOWED EXCEPT WHERE OTHERWISE STATED:-

1. FOR SURFACES IN CONTACT:-
   -·05 (-·002) ON THE MALE DIMENSIONS.
   +·05 (+·002) ON THE FEMALE DIMENSIONS.
2. FOR SURFACES NOT IN CONTACT (GOVERNING STARRED DIMENSIONS*):-
   (a) FOR DIMENSIONS BELOW 100·0 (4·0).
   -·20 (-·008) ON MALE DIMENSIONS.
   +·20 (+·008) ON FEMALE DIMENSIONS.
   (b) FOR DIMENSIONS 100·0 (4·0) & ABOVE.
   -·002 PER MM. (-·002 PER INCH) ON MALE DIMENSIONS.
   +·002 PER MM. (+·002 PER INCH) ON FEMALE DIMENSIONS.

TO BE STAMPED WHERE INDICATED THUS:-
CONTRACTOR'S INITIALS.
YEAR OF MANUFACTURE.

GUN, SALUTING, 3PR., 3CWT. (PORTABLE SALUTING GUN) MK. IN. I.

BODY, BREECH END, MK. IN. I-C (CONVERTED).