PART NO. IQX 1012	DRG. CONVENTIONS CONFORM TO IS: SPECIFICATIONS
	DIMS. ARE IN mm. GEN.TOL.MEDIUM CLASS TO IS:2102

D.C.35701-A

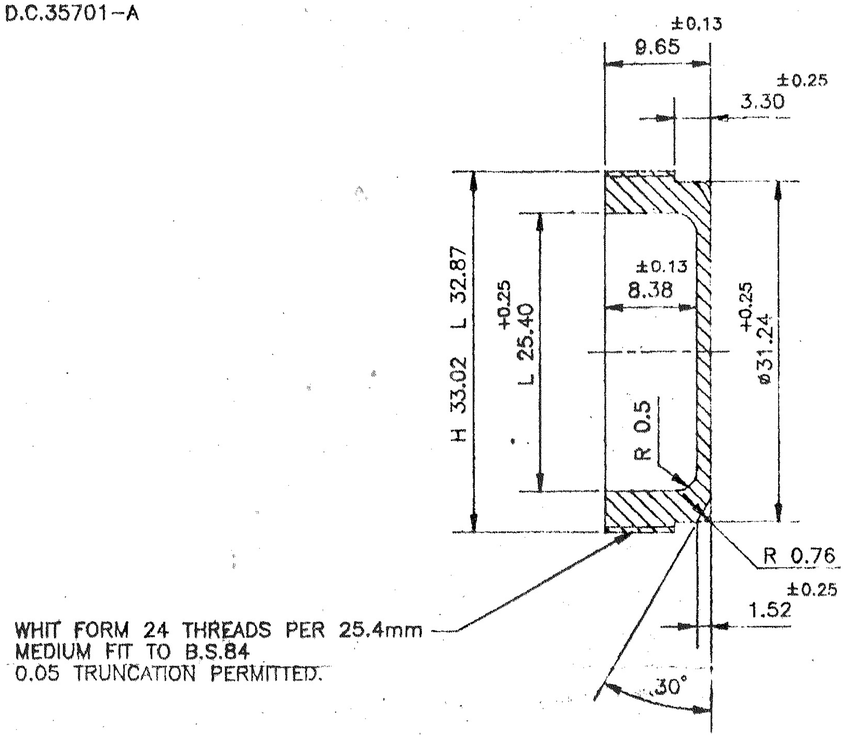

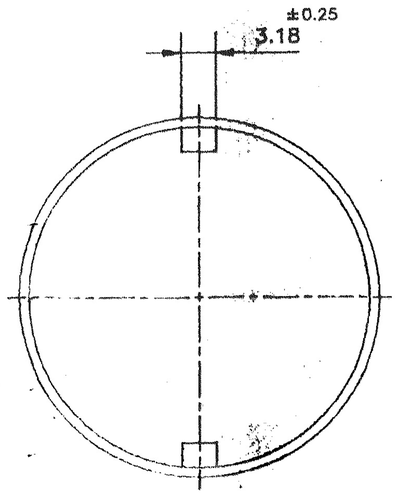

NOTE:-

DIMENSIONS APPLY AFTER PLATING

PROTECTIVE FINISH:-

TO BE ANODISED TO DEF.151:1966
~~TYPE 2 (CHROMIC ACID PROCESS)~~

TECHNICAL REQUIREMENT:-

SPEC.NO.CQA(A) 0922

"NO PERIPHERAL GRAIN GROWTH IS PERMITTED IN THE FINISHED PRODUCT AFTER MACHINING. MAXIMUM ALLOWABLE PERIPHERAL GRAIN GROWTH ON EXTRUDED SECTION: 5% OF THE NOMINAL DIAMENSION ALL OVER. (REFERENCE: CLAUSE 4.2 OF IS 1733-1983)"

R. NO.	DATE	AUTHORITY	REVISION	ZONE	AHSP	D.O.
	23.9.02	DC 36852-A	MATERIAL AMENDED			
	13.4.99	D.C.36550-A	MATERIAL NO HIGH GRAIN SIZE ---- MACHINING ADDED			
	28/8/96	DC 36157-A	REDRAWN WITHOUT CHANGE AND FRESH MASTER COPY REPLACED IN SUPERSESSION OF EXISTING DILAPIDATED COPY.			
			PREV.DCs NOs.35701-A,35815-A & 36103-A			SD/-
					SIG.	

DRG. SEALED:- 29/4/94 (PROV)

DRN:- VAK	CHD:-	TRD:-	COMP:-
C.D'KAN	O I/C D.O.	SCALE:- 2:1	
APPD.	FOR CQA(A)	EST.MASS:- -	
		GAUGE SCHD:- I-3421	
		DATE:- 25-4-94	

MATL:- AL.ALLOY TO SPEC.IS:733-1983 (3rd REVISION) DESIGNATION 24345 CONDITION WP *:

PROTECTIVE FINISH:- AS ABOVE

ASSY.DRG. IQX 79 GE

DESIGNER'S REF. ARDE 2236 DET.NO.11

PART NO. IQX 1012

D.S. CAT NO. NOT APPLICABLE

AHSP:- CQA(A)KIRKEE

MAGAZINE

DH 5H

14857 (Dt.26/7/96)

BASED ON DRG.NO:-QX 360