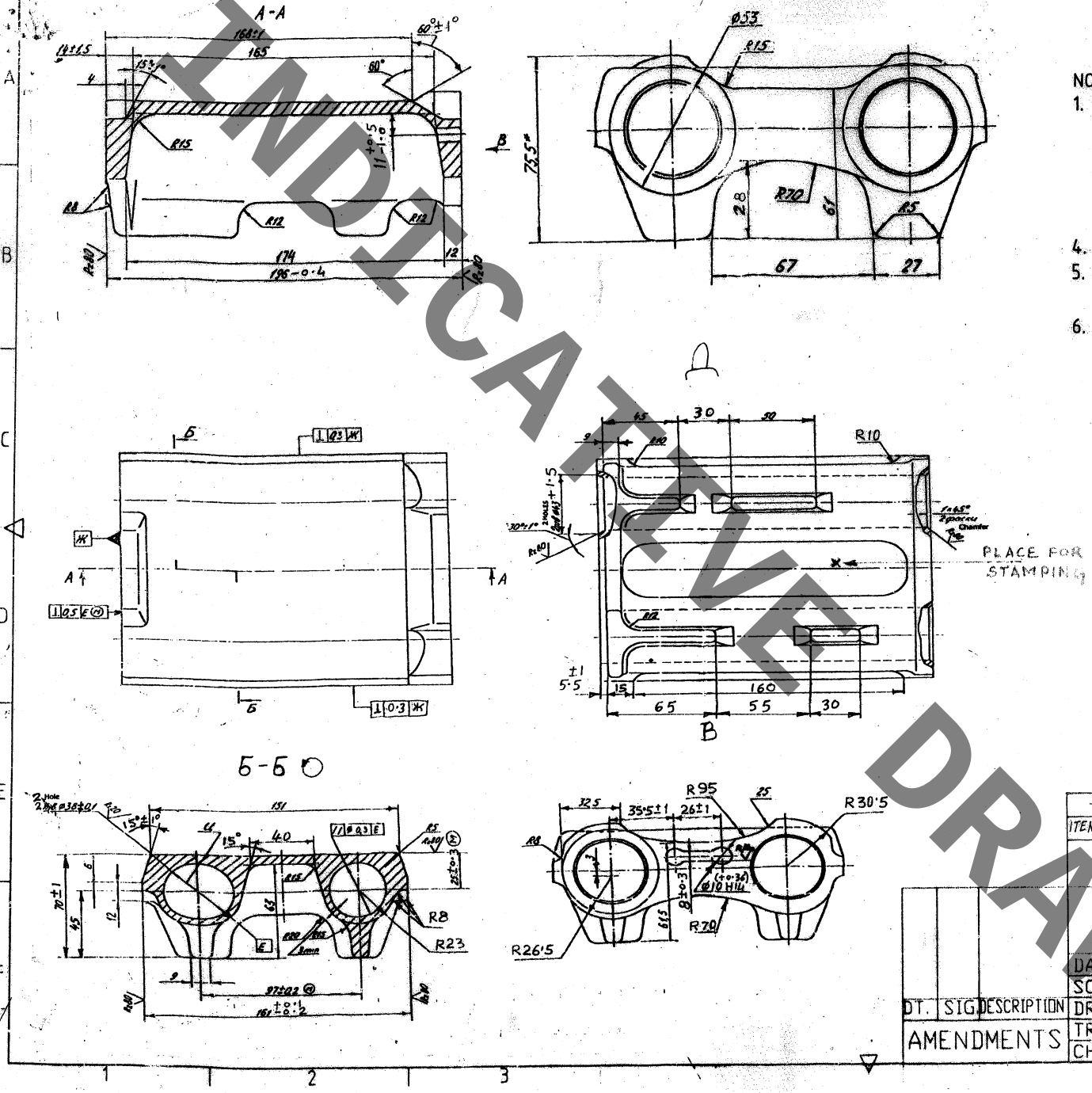

NOTE:-

1. 341 ... 477 BHN. isothermal hardening. Scope of checking as per group 1 of table 4 OST 3-4704-80, impact strength KCV ≥ 5 Kgf m/cm², Yield strength σ_T ≥ 95 Kgf/mm. As per GOST 1497-84. place of testing hardness-surface ✱ or opposite face with depth of dressing $0.3_{-0.3}$ mm.
4. ✱ Dimension for reference.
5. After heat treatment it is allowed to change dimension ✱ by $\phi 38^{+0.25}_{-0.15}$ mm.
6. Other requirements as per 520. TY1

Note:-These Drawings are only for reference. Actual drawings may be different and shall be issued at the time of procurement.

No part of these drawings may be reproduced in any form without prior permission in writing of OFM.

ITEM NO.	NO.OFF	MATL	DESCRIPTION
—	—	STEEL 38XC TO GOST 4543-71	T.A. LINK

LIST OF PARTS

COMPT.	STORE DRG. NO 172.55.012
TA. LINK	
DATE : 18-4-05	
SCALE	DRG.NO. OFM 32844
DRAWN	
TRCD.	M/C
CHKD.	O.F.MURADNAGAR

NO.OF SHTS.
SHT. NO.

DT.	SIG	DESCRIPTION
AMENDMENTS		

INDICATIVE DRAWINGS