DRG. No. 2 025 500

ALL DIMENSIONS ARE IN mm UNLESS OTHERWISE STATED

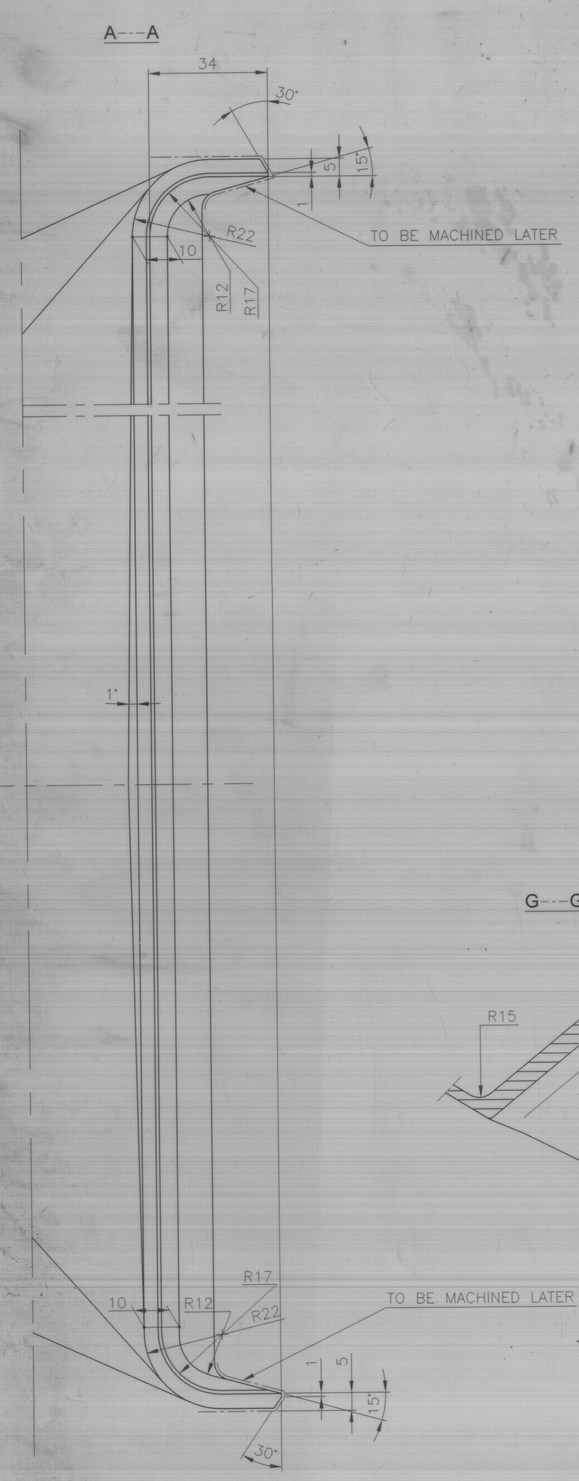

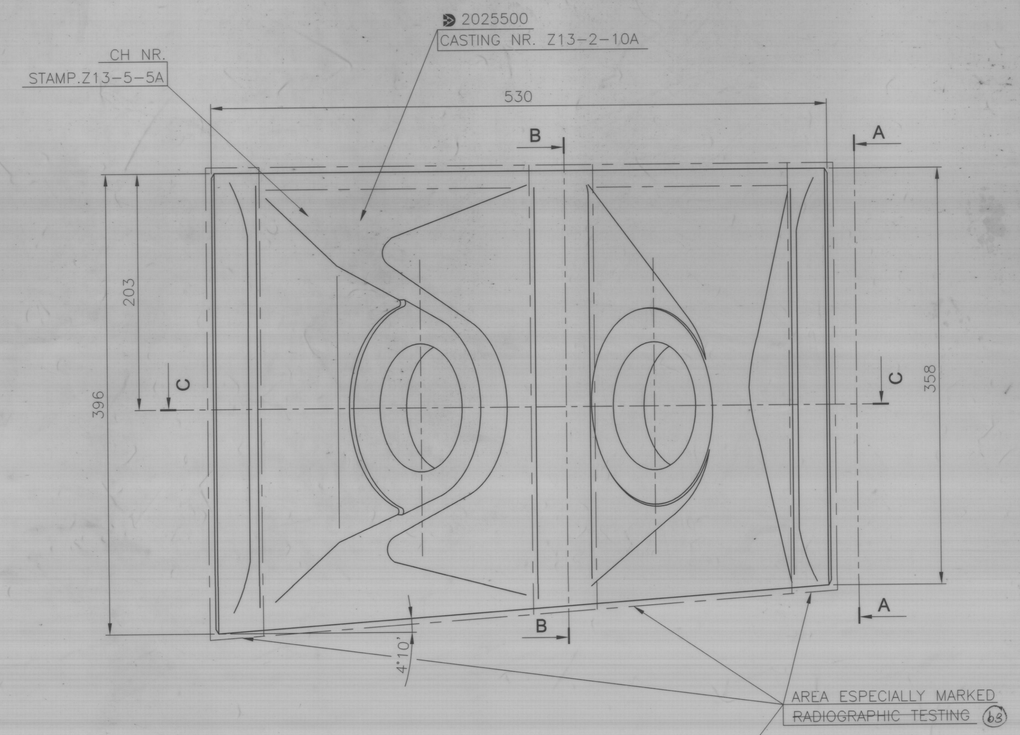

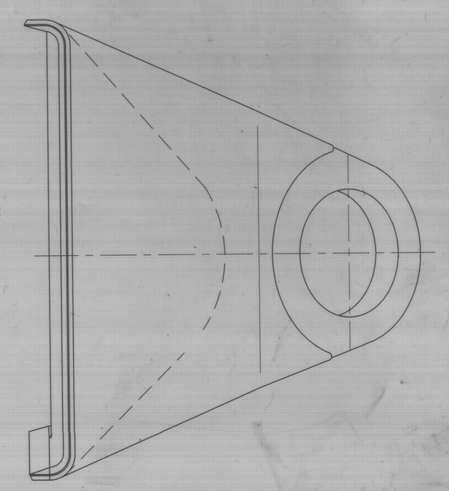

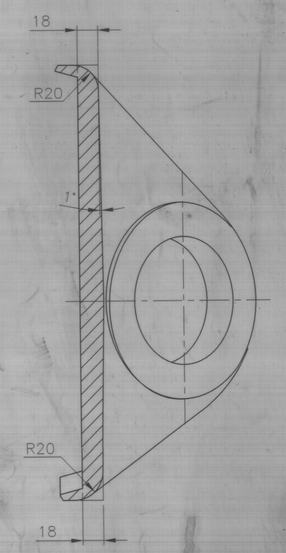

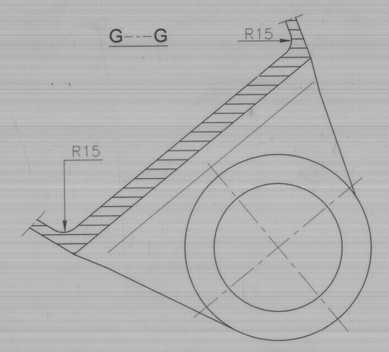

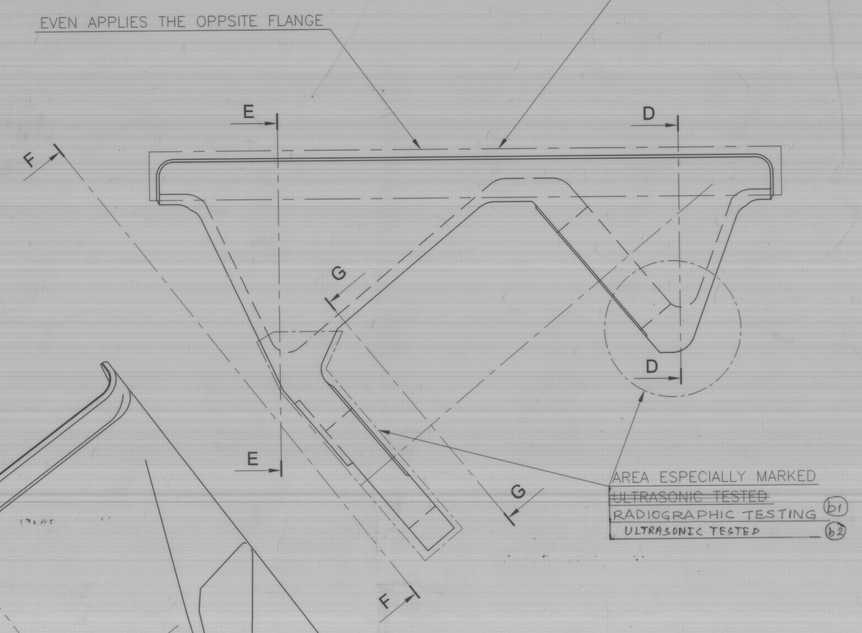

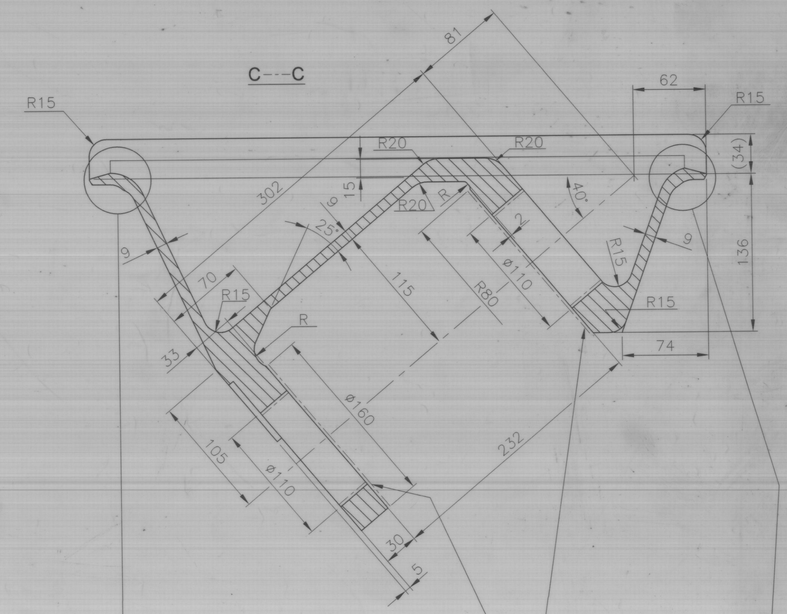

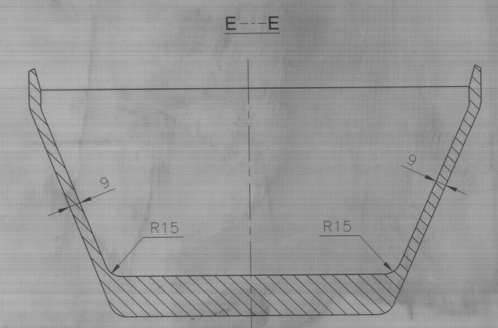

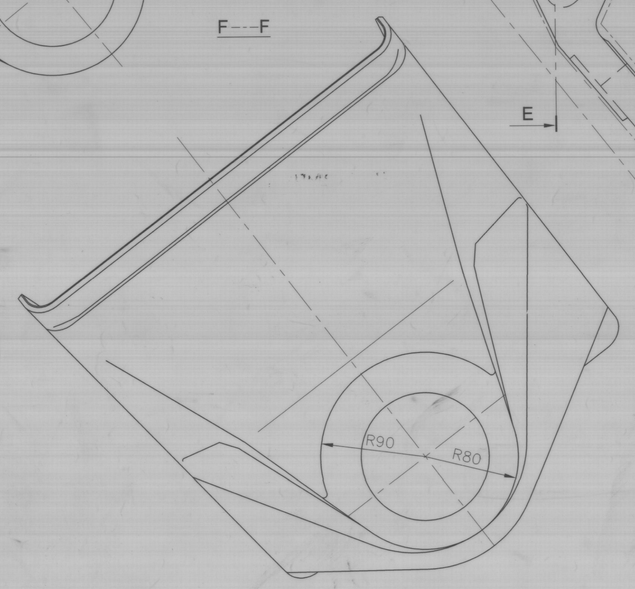

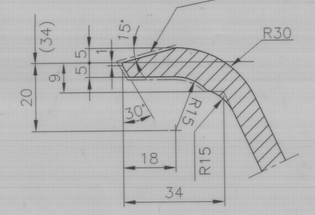

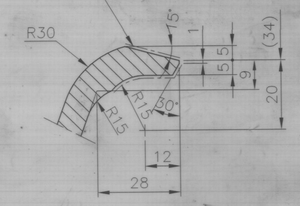

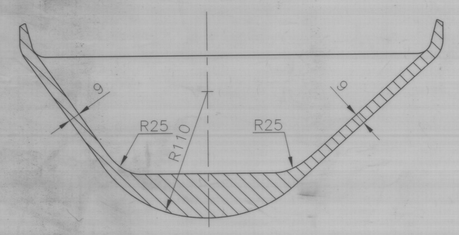

CASTRADIUS 3 APPLIES
UNLESS OTHERWISE STATED

DIMENSIONS GIVEN REGARDING WALL THICKNESSES
ARE MINIMUM
CASTING TOLERANCE ACCRORDING TO SS722. GTA 16

MANUFACTURING SPECIFICATION A2003 AND 0804 092
ASTM E446-78 CLASS2, GROUP A,B AND C
GROUP D,E,F AND G ARE NOT ACCEPTED.
ONE TENSILE TEST FROM SEPARATLY CAST TESTPIECE FOR EACH CHARGE.

FOR CASTING DRG NO. - GCF/50/39490

P.No.	NOMENCLATURE	No. OFF	MATERIAL	HARDNESS	STANDARD	REMARKS
GEN. TOL. NOT SPECIFIED						
LINEAR DIMENSIONS						

0-6 ±0.1					
6-30 ±0.2					
30-120 ±0.3					
120-315 ±0.5					
315-1000 ±0.8					
1000-2000 ±1.2					
ANGULAR DIMENSIONS	INDEX	AMENDMENTS	SIGN	DATE	APPROVED
0-10° 41'					
10-50° 30'					
50-120° 20'					
120° 15'					

~ UNMACHINED
▽ ROUGH
▽▽ SMOOTH
▽▽▽ FINISH

3/1/03	Radiographic testing is removed	[illegible]	03-3-20
28/1/03	Radiographic testing is removed	[illegible]	28-3-20
20/1/01	RADIOGRAPHIC TESTING HAS ULTRASONIC TESTED	[illegible]	03.01.22

FOR Sr. GM G.C.Fy.

	NAME	DATE
2015		
DRN.	VISHW	11/10
CKD.	ABHINASH	15/06
APPROVED		

BRACKET

GUN CARRIAGE FACTORY, JABALPUR

MATERIAL
IS:10243-1999, Gde BG, Cond 'QT' With 90 & 50 each 0.035 Max. to achieve Rp0.2 = 600 N/m2 min Rm = 800-950 MPa, El = 10%, HB = 235-275

SCALE | REF.DRG.NO.

ASSY/SUB ASSY NO. 1145858

DRG. No. 2 025 500

SHEET NO. OF SHEETS

DRG. No. GCF/50/39490

DRAWING CONVENTIONS CONFROM TO SP:46
DIMNS. ARE IN mm. UNLESS OTHERWISE STATED.

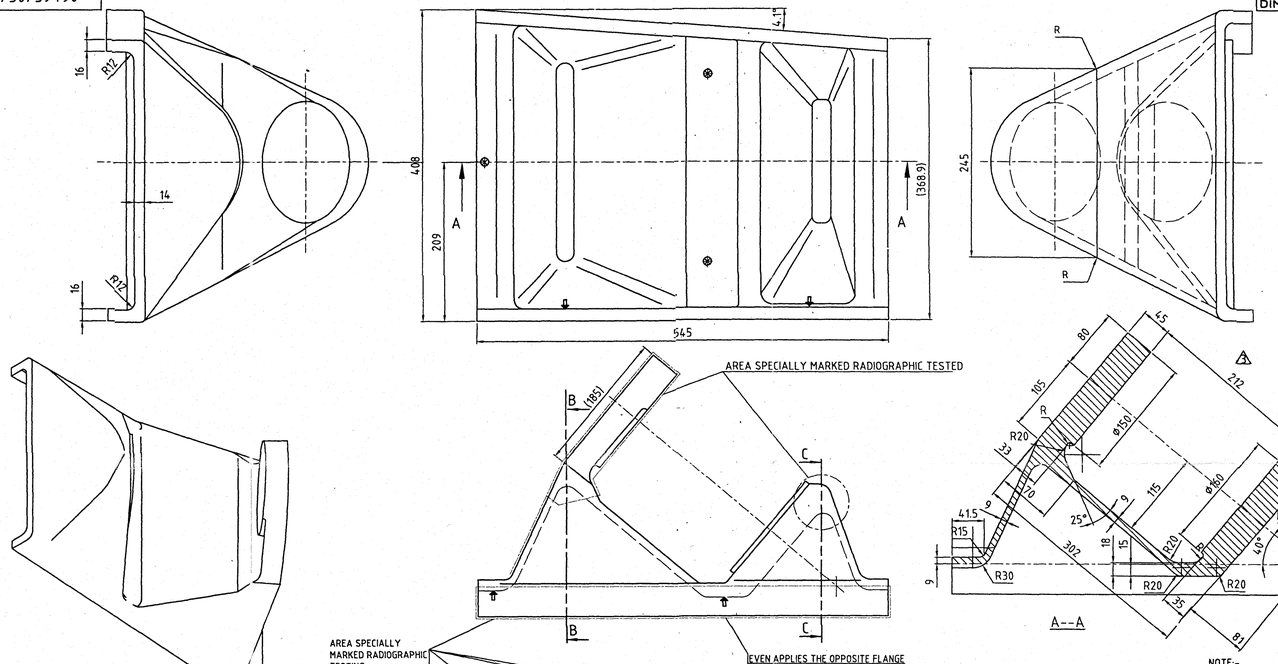

Weight 51.5 Kg

OEM MATL. - SS 2225-24

NOTE:-
1. APPRORIATE CASTING CLEARANCE TO BE APPLIED
2. CAST RADIUS 3 APPLIES UNLESS OTHERWISE STATED
3. DIMENSIONS GIVEN REGARDING WALL THICKNESS ARE MINIMUM CASTING TOLERANCE ACCORDING TO 55122 GTA 16-18
4. MANUFACTURING SPECIFICATION A 2003 AND 0 804 092
5. ASIM E446-78 CLASS 2, GROUP A, B AND C
GROUP D,E,F AND G ARE NOT ACCEPTED
6. ONE TENSILE TEST FROM SEPARATLY CAST TESTPIECE FOR EACH CHARGE
7. THE AREA OTHER THAN SPECIFIED ARE TO BE TESTED FOR RADIOGRAPHIC LEVEL 3

FOR COMPONENT SEE DRG. 2025500

MATL:- IS: 10343- 1999, Gde B Q, COND'QT' WITH %S & %P EACH 0.035 MAX. TO ACHIEVE Rp0.2 = 600 Mpa MIN., Rm = 800-950 Mpa, El = 10%, HB = 235-285.

P.No.	NOMENCLATURE	No. OFF	MATERIAL	HARDNESS	STANDARD	SIZE	REMARKS

GEN. TOL. NOT SPECIFIED

LINEAR DIMENSIONS

0-6	±0.1
6-30	±0.2
30-120	±0.3
120-315	±0.5
315-1000	±0.8
1000-2000	±1.2

ANGULAR DIMENSIONS

0-10°	±1°
10-50°	±30'
50-120°	±20'
>120°	±10'

UNMACHINED
ROUGH
SMOOTH
FINISH

INDEX	AMENDMENTS	SIGN	DATE

BRACKET , CASTING
FOR
DHANUSH 155 mm FH GUN

GUN CARRIAGE FACTORY, JABALPUR

FOR G.M G.C.Fy.

2014	NAME	DATE	APPROVED
DRN.	Alok	03/12/14	
CKD.			JWM/Shop
HOS/DO			
SEC.	M/C		JWM/TR

SCALE | REF.DEMD.
REF.DRG.NO. 2025460
DRG.No. GCF/50/39490
SHEET NO. 1 OF 1 SHEETS