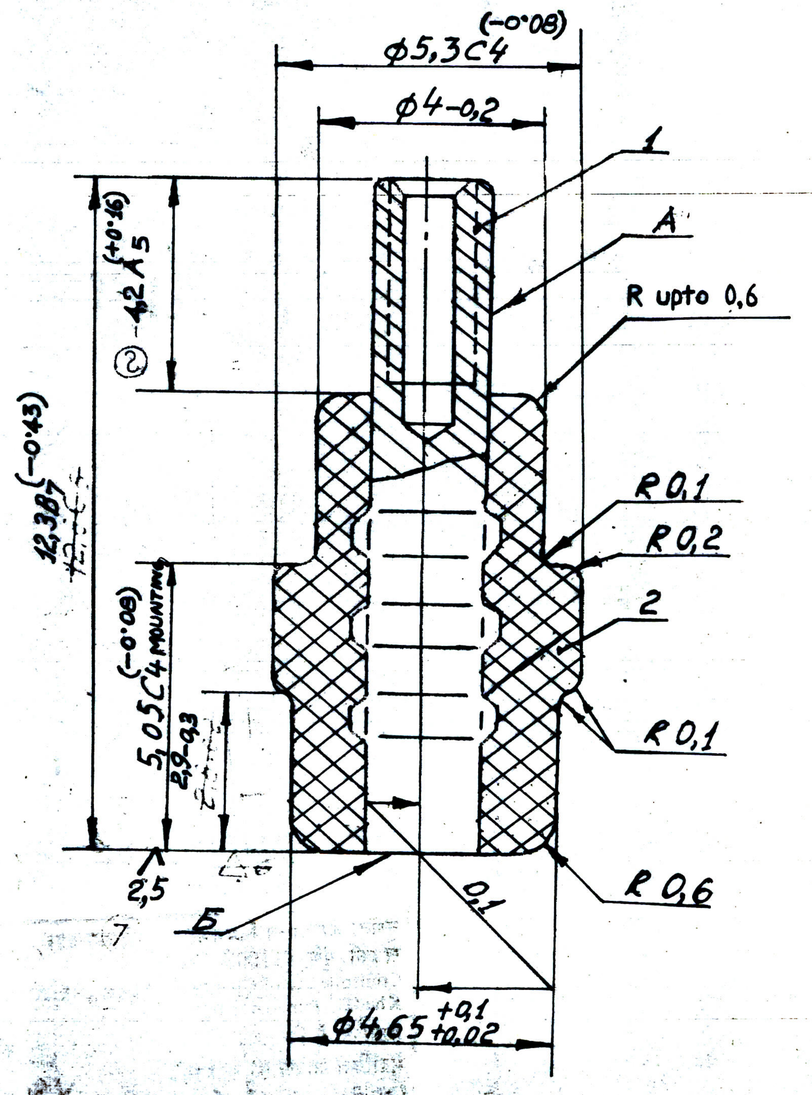

1). Dimensions, except ϕ4,65 +0.1 +0.02, 12,38, and 5,05 C4 mounting-calculated

2). The following is not allowed.

a). plastic on surface "Б",

b). under pressing of moulding material, cavities

c). metallic inclusions in plastic.

3). The following is allowed:

a). local insignificant chippings and cavities, traces of fin machining unevenness of plastic, roughness, marks and scratches,

b). marks on surface "A" after removing the fin,

c). local bulgings of plastic on surface "A" upto 0.3mm and circular bulging upto 0,15mm.

4). General requirements as per OST B84-533-72.

INDIGENOUS EQUIVALENT MATERIAL:- MOULDING MATERIAL TO SPEC IS 1300, GRADE 6 OR JSS 1097 GRADE A OR E. (LATEST ISSUE)

9
D557

		moulding material		
		K-214-2 TYБ-05-1466-76.		
1	1	rod	1	(OTF/SE/002)
Ref. No.	Designation	Description	Q.ty	Remarks.

3-022859

3K1

SL.NO	SHEET	DOC.NO	SIGN	DATE
DRAWN BY		BHUSHAN		30.9.85
EDITED AND CHECKED BY		D.K. SAIN		7.10.85
FOREMAN OF DC				
DIVISIONAL OFFICER		A.K. KUNAL		
		NAME	SIGN	DATE

ROD IN INSULATION

(OTF/SE/001)

C81

SHEETS	WEIGHT	SCALE
6	0.23	10:1

TOTAL SHEETS

ORDNANCE FACTORY PROJECT HYDERABAD

APPROVED

FOR C.I.(A)

AHSP- C.I.(A) KIRKEE

Восстановленный подлинник №1

3-022859

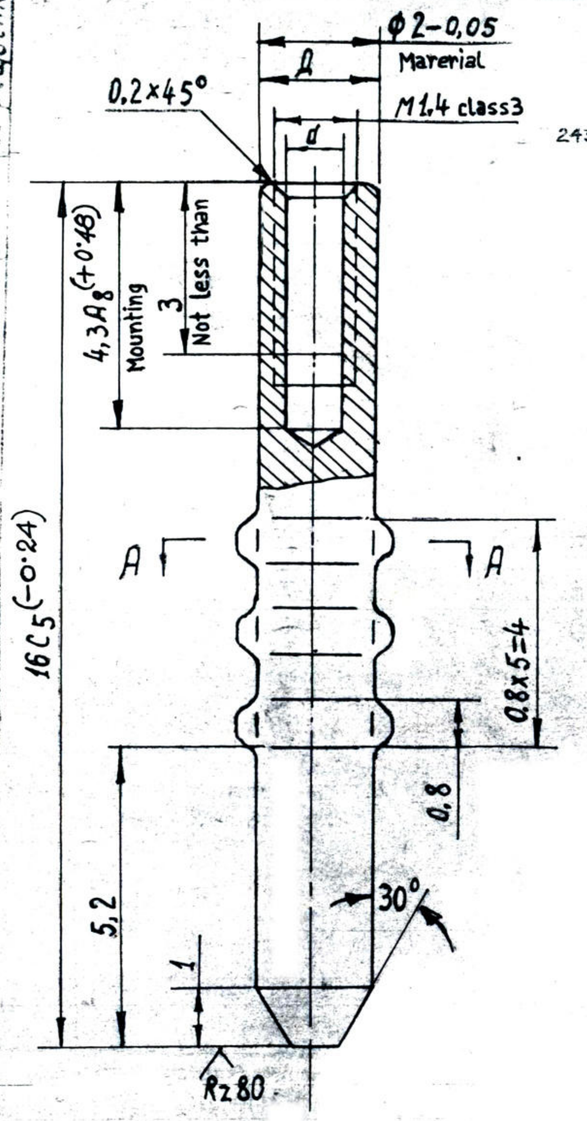

INDIGENOUS EQUIVALENT MATERIAL:-

ALUMINIUM ALLOY TO SPEC IS 740 DESIGNATION 24345 IN 'W' CONDITION OR IS 733 DESIGNATION 24345 IN 'W' CONDITION. (LATEST ISSUE)

COMPONENT SHOULD BE FREE FROM PERIPHERAL GRAIN GROWTH.

2). All dimensions, except 16C5, Ф2-0.05 and threads, are provided with tool.

3). Mechanical properties of material after hardening and aging should correspond to GOST 14838-78.

4). It is allowed increasing of Ф2-0,05 material from the side of cutting upto 2.05 maximum under the condition of fitness of part as per gauges on concentricity

5). Downfall of No-go smooth plug gauge along the internal diameter of thread M1,4 class3 upto 0.05mm depth upto 0.9mm from the face of part is allowed.

6). Bulging of metal in the plane of projections as a result parting of stamp tracers is allowed

7). To be scratch brushed

8). It is allowed to manufacture from aluminium alloy wire Д1П GOST 14838-78.

9). Residue from the cutting by parting off tool diameter 0.3 maximum and height 0.5maximum is allowed from chamfer side.

10). It is allowed to decrease the height of rod upto 16-1,1.

11). It is allowed to tumble (rumble)

12). It is allowed on external surface, except dimension 4.3 +0·48 marks (but not more than 3 in quantity) with a depth upto dents and 0.05 are allowed.

13). General requirements areas per OST B84-533-77

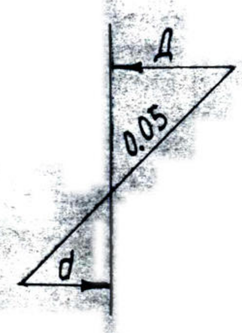

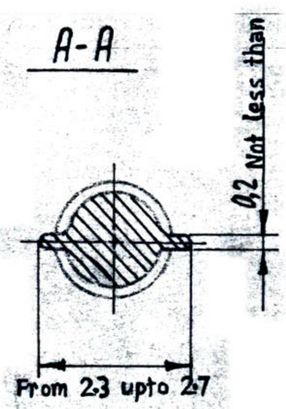

DATE	AUTHORITY	REVISION	SIG. AHSP	SIG. D.O.
19-9-94	D.C. 35811-A	INDIGENOUS EQUIVALENT MATERIAL ADDED.		
27-3-86	DCI.33915-A	DRG. PROV. SEALED.		

APPROVED FOR C.I.(A).
AHSP-C.I.(A).KIRKEE.

SUPC SHEET	DOCUMENT	SIGN	DATE
DRAWN BY	SHUSHAN		1.10.85
EDITED AND CHECKED BY	P.K. JAIN		7.10.85
FOREMAN OF DC			
DIVISIONAL OFFICER	P.K. KUMAR		12/X
	NAME	SIGN	DATE

3-022859

ROD.

(OTF/SE/002)

WIRE Д16П-2
GOST 14838-78

3X1

1

SHEETS	WEIGHT	SCALE
5	0.1	10:1

TOTAL SHEETS

ORDNANCE FACTORY PROJECT HYDERABAD

Копировало Широкова 1.12.81

Формат: 12

Взамен инв. № подлинн. 219-25

Инв. № подл. 475-8

Дата | Подп.

REVISION | AUTHORITY | DATE

UNDER INDIGENOUS EQUIVALENT MATERIAL "COMPONENT---GRAIN GROWTH" ADDED. | D.C.35325-A | 26-8-97

Взамен инв. № подлинника

3 | 3-022859

Взамен инв. №

Подпись и дата

Инв. № подл.

219-10

475-10

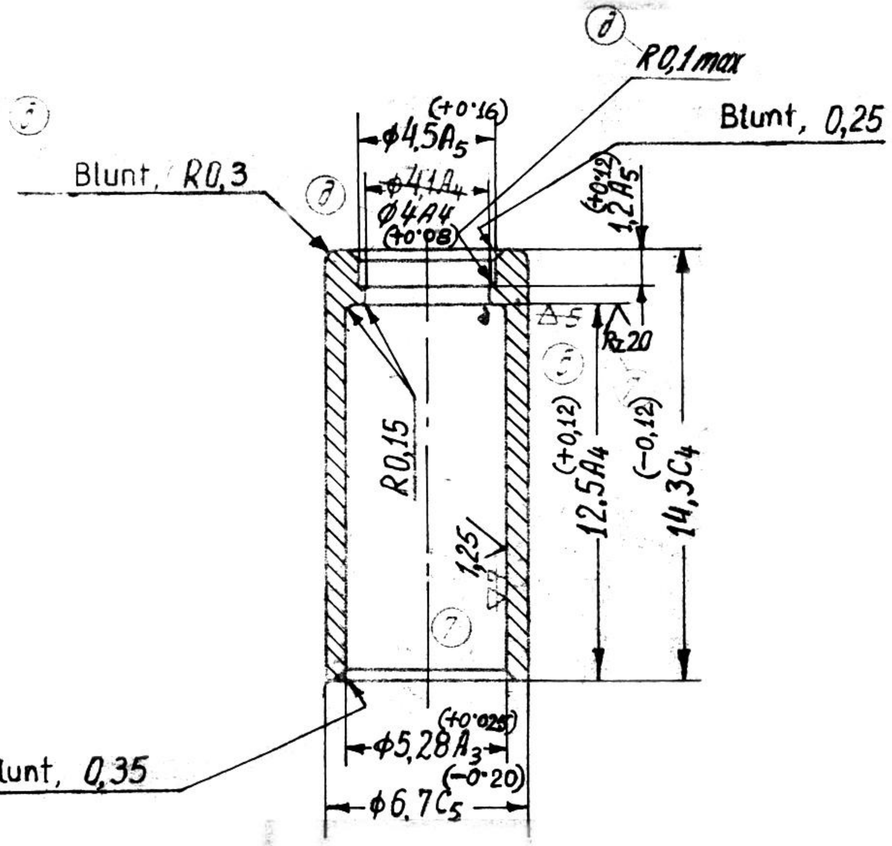

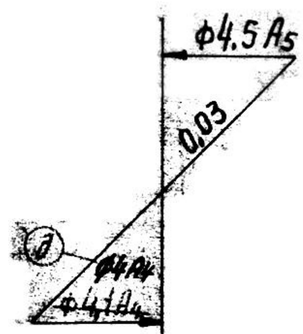

25/(V) ~~Технические~~ 15

D 557

1). Alternate material round bar Ф16T 7H GOST 21488-76

3). Along the surface Ф6.7C5 small marks and dents of material within the limits of sample fitness are allowed.

4). Concentricity Ф5.28A3 with respect to Ф4A4 within the limits of tolerer is provided technologically machining is to be carried out from one setting.

5). Round bars Ф T round 8H, or Ф round 7H GOST 21488-76 are allowed

6). Machining of surface with surface roughness 1.25/ Ф5.28A3 is to be carried-out along the length 11 mmm further with surface roughness Rz20

7) General requirements as per OST B 84-533-72.

INDIGENOUS EQUIVALENT MATERIAL: ALUMINIUM ALLOY TO SPEC. IS 733 DESIGNATION 24345 IN 'W' CONDITION OR DESIGNATION 24534 IN 'W' CONDITION. (LATEST ISSUE). COMPONENT SHOULD BE FREE FROM PERIPHERAL GRAIN GROWTH.

DATE	AUTHORITY	REVISION	SIG. AHSP	SIG. D.O.
26-8-97	DC.36325-A	UNDER INDIGENOUS EQUIVALENT MATERIAL "COMPONENT ------ GRAIN GROWTH" ADDED		
21-9-94	DC.35811-A	INDIGENOUS EQUIVALENT MATERIAL ADDED		
27-3-86	DCI.33915-A	DRG. PROV. SEALED		

APPROVED

FOR C.I.(A)

AHSP-C.I.(A) KIRKEE.

SL NO	SHEET	DOC NO	SIGN	DATE
DRAWN BY		BHUSHAN		1.10.85
EDITED AND CHECKED BY		D.K. JAIN		7.10.85
FOREMAN OF DC				
DIVISIONAL OFFICER				
		NAME	SIGN	DATE

3-022859

3X1

SLEEVE

(OTF/SE/003)

ROUND BAR Ф16T 8H GOST 21488-76

3

SHEETS	WEIGHT	SCALE
5	0.52	5/1

TOTAL SHEETS

ORDNANCE FACTORY PROJECT HYDERABAD

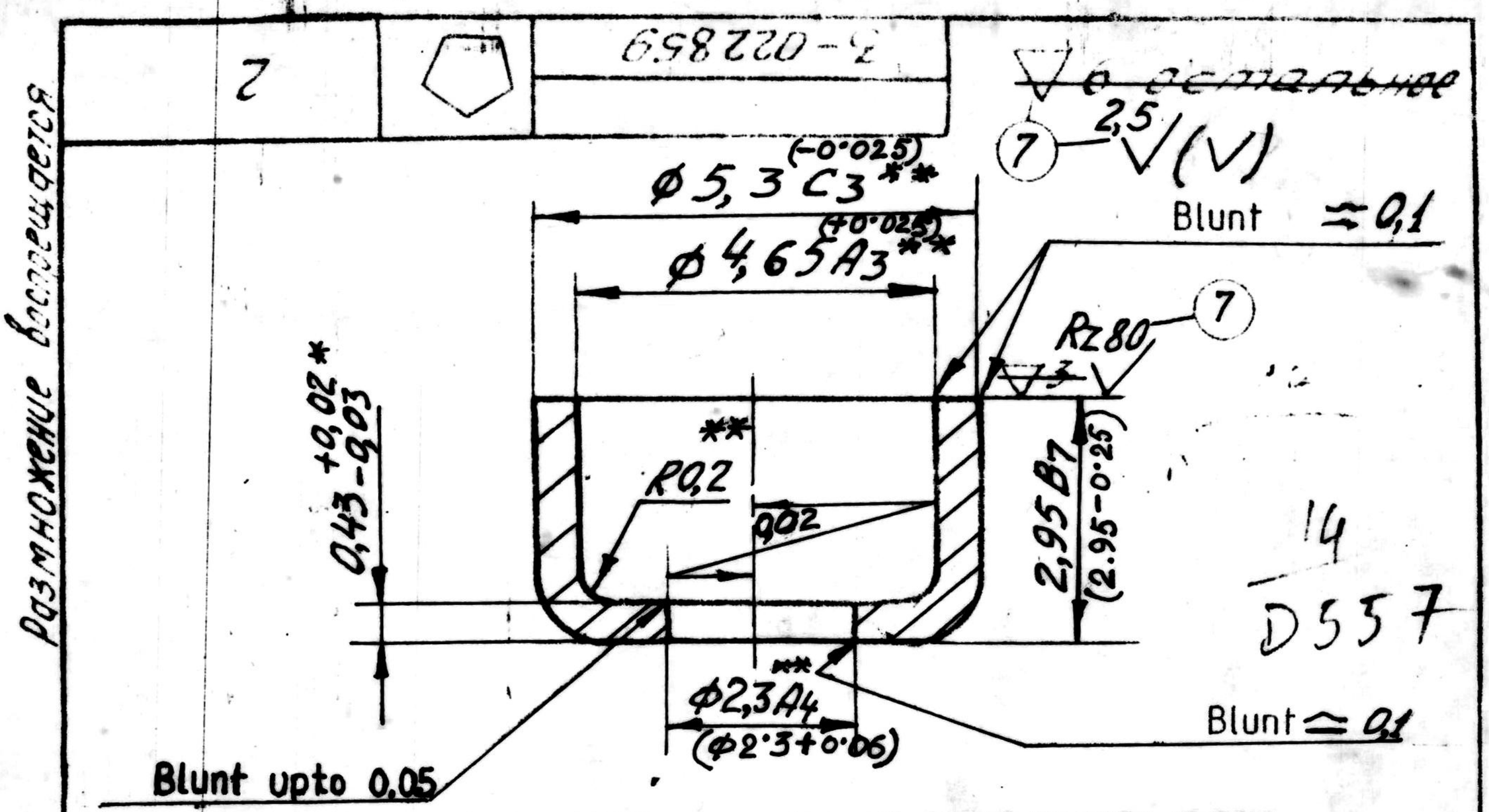

INDIGENOUS EQUIVALENT MATERIAL:- ALUMINIUM STRIP TO SPEC IS 737 DESIGNATION 19500 IN 'O' CONDITION. (LATEST ISSUE)

1). * Dimension is given for reference.

2). ** Dimensions are ensured with tool

3). When assembling the articles with dextrin lead azide, make cups with hole having $\phi 2.7A_4$ instead of $\phi 2.3A_4$.

4). Bands ДПРхМ0,47А5, ДПРХМ 0.5А5, ДПРХМ0.43А6, ДПРХМ0.47А6 and ДПРХМ0.5А6 GOST 1018-77, are allowed.

5). General requirements as per OST B84-533-72.

FOR GSF MANUFACTURE, MAKE HOLE Ø 2·7A4 INSTEAD OF Ø 2·3 A4 AS PER NOTE (3).

Authority :- TELEGRAM No. X 1900 AR14 PUNE-KHADKI 08 STEMLYDA 58 DT. 9-10-91.

APPROVED

FOR C.I.(A).

DATE	AUTHORITY	REVISION	SIG. AHSP.	SIG. D.O.
19-9-94	DC 35811-A	INDIGENOUS EQUIVALENT MATERIAL ADDED		
27-3-86	DCI. 33915-A	DRG. PROV. SEALED.		

AHSP-C.I.(A).KIRKEE.

3-022859

3X1

SL NO	SHEET	DOC NO	SIGN	DATE
DRAWN BY		BHUSHAN.		1.10.85
EDITED AND CHECKED BY		D.K. JAIN		7-10-85
FOREMAN OF DC				
DIVISIONAL OFFICER		A.K. KUNDU		
		NAME	SIGN	DATE

CUP

(OTF/SE/004)

band ДПРХМ 0,43 А5 GOST 1018-77

2

SHEETS	WEIGHT	SCALE
5	0,05	10:1

TOTAL SHEETS 5

ORDNANCE FACTORY PROJECT HYDERABAD

Размножение воспрещается

Инв № 8976

1.10.85.

3-022859

Сб2

		SIG. D.O.	
		SIG. AHSP	
	DRG. PROV. SEALED:		
	REVISION		
	DCI.33915-A		
	AUTHORITY		
27-3-86			
DATE			

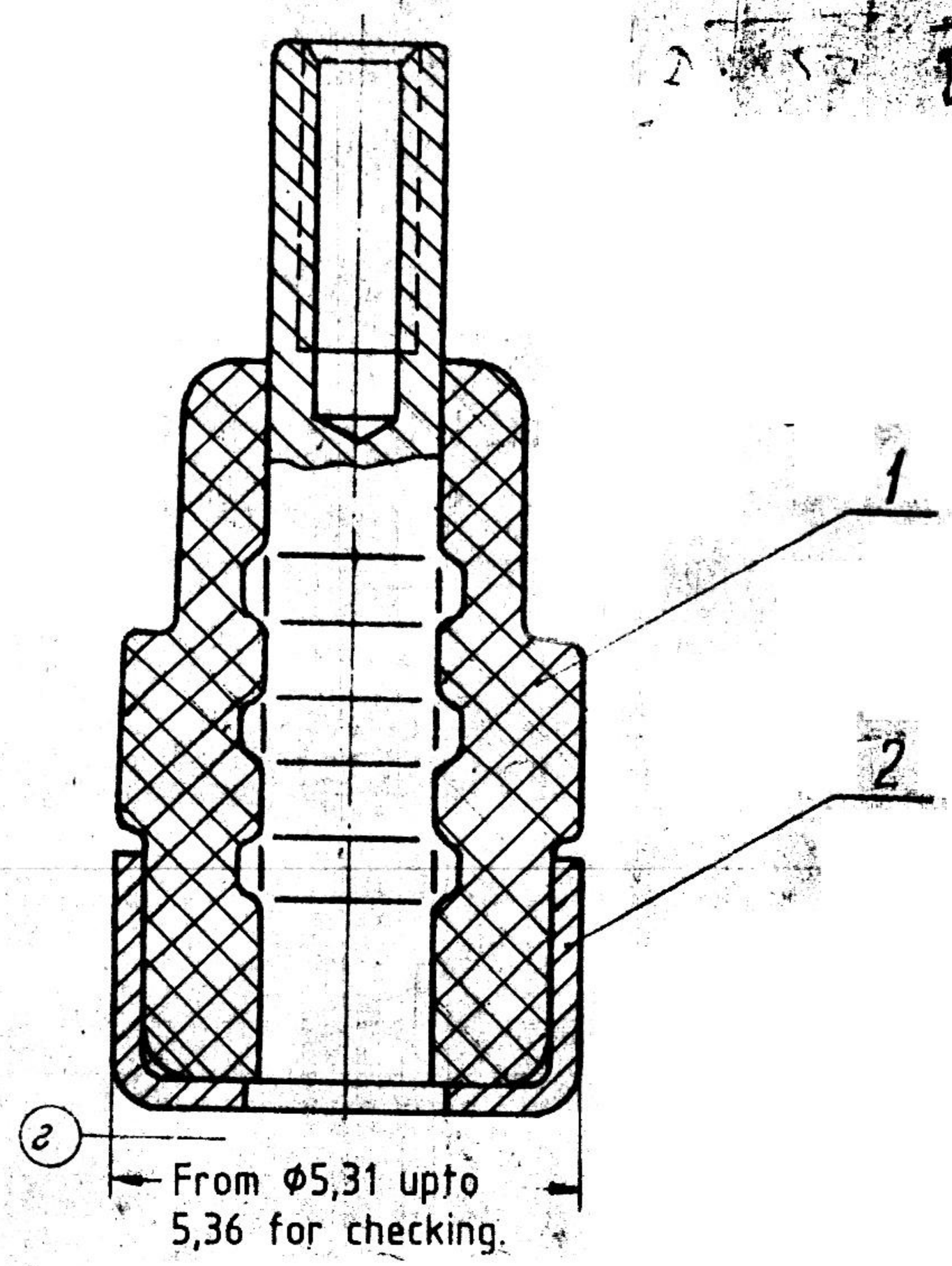

1). Cup item № 2 is to be pressed upto the stop in to the base
2). General requirements as per OST B84-533-72

Ref. No.	Designation	Description	Qty	Remarks
2	2	Cup	1	(OTF/SE/004)
1	сб1	ROD IN INSULATION	1	(OTF/SE/001)

3-022859 3Ж1

(OTF/SE/009)

HEAD.

Сб 2

SUB/SHEET	DOC NO	SIGN	DATE
DRAWN BY	BHUSHAN		1.10.85
EDITED AND CHECKED BY	D.K. JAIN		7.10.85
FOREMAN OF DC			
DIVISIONAL OFFICER	A.K. LUNIA		12/X
	NAME	SIGN	DATE

APPROVED

FOR C.I.(A).

AHSP-

C.I.(A).KIRKEE.

SHEETS	WEIGHT	SC
5	0,28	1

TOTAL SHE

ORDNANCE FACTORY PROJ
HYDERABAD

3-022859 | C63

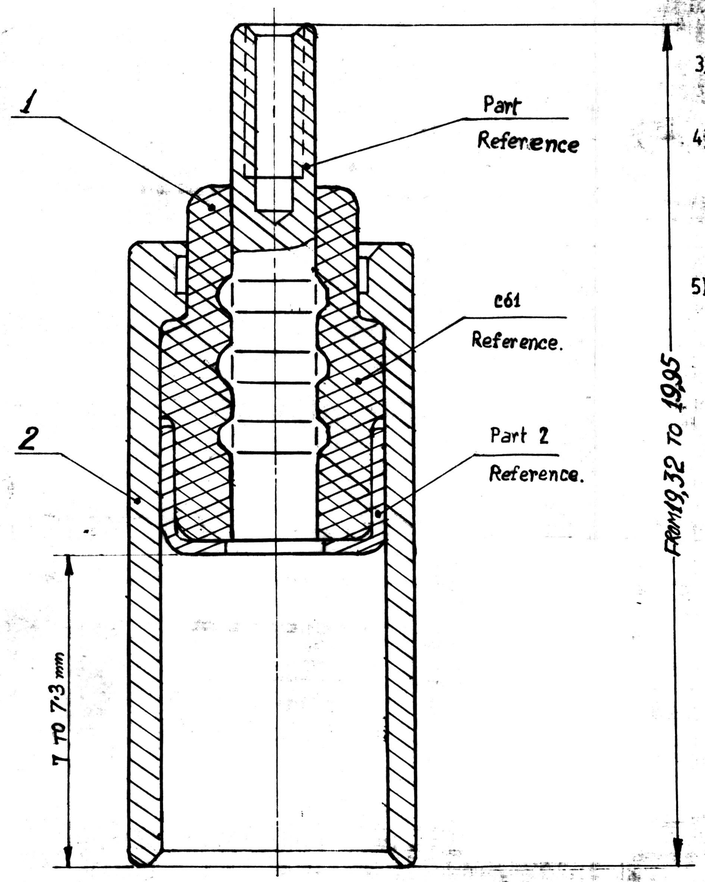

1). Head (item №1) is to be set into the sleeve (item №2) against the stop under pressure 625 ± 25 kg/cm² (calculated)

2). Ring shaped bulging of metal cup parts part 2 (in joint of cup and sleeve) are allowed as per the height of sleeve not exceeding 2mm, It is allowed to remove bulging of metal, exceeding 2mm without damaging of surface finishing of the sleeve.

3). Uneven ring (shaped) spark gap between cup Part 2 and rod part 1 is allowed.

4). Before filling carry-out "BURNING" of spark gap by means of discharging capacity of capacitor with capacity 0.25 to 0,33 m KF charged upto voltage 800 to 1000V. After "BURNING" partial melting of metal cup part2 and rod part1 is allowed.

5). Ring (shaped) spark gap formed by the face of connecting rod part 1 and cup part 2, when discharged on it by five folds impulses of capacity 100Pf, charged upto voltage.

a). 700V-should not be broken down.

b). Above 700V and upto 1500V should be broken down. In this case. part 1 and part 2 should be shunted by the capacity of 50Pf (part 1 is to be connected with the negative plate of the capacitor).

6). It is allowed to carry out assembly in the following sequence. Put the insulated connecting rod in the sleeve item No.2 and send on the cup part 2 under pressure 625±25kg/cm² (calculated)

7). General requirements as per OST B84-533-72.
Remarks when assembling on oil presses with compensatory device pressure of pressing may be increased upto 650 ÷ 700kg/cm²

8). In units, determined for articles assembly with dextrin lead azide, ring (shaped) sparkgap formed with face of rod part 1 and cup part 2, while discharging on it by 5 impulses in sequence having 100 pf. Capacity charged upto voltages.

a). 900V-Should not be broken down.

b). 1800V should be broken down.

Part 1 and part 2, should be shunted by the capacity 50Pf. Negative plate of capacitor should be connected with part 1.

Ref. No.	Designation	Description	Qty	Remarks
2	3	Sleeve	1	(OTF/SE/003)
1	c62	Head	1	(OTF/SE/009)

3-022859 3X1

SUB/SHEET NO.
DRAWN BY BHUSHAN 1.10.85
EDITED AND CHECKED BY
FOREMAN OF

BODY.

C63

SHEETS | WEIGHT | SCALE
5 | 0,8 | 10:1

(OTF/SE/010)

ORDNANCE FACTORY PROJECT, HYDERABAD

DATE	AUTHORITY	REVISION	SIG. AHSP.	SIG. D.O.
24-11-92	D.C 35416-A.	UNDER NOTE №4 LINE 1 & 3 AMENDED & DIMN. 7 TO 7·3 mm ADDED.		
27-3-86	DCI 33915-A.	DRG. PROV. SEALED.		

APPROVED
FOR C.I.(A)
AHSP-C.I.(A).KIRKEE