DRG.NO.TEND.1692

DIMNS. ARE IN mm.

FOR EXPLANATION OF DETAILS WHEREVER NOT SPECIFIED, REFER D.D. NOTE SHEET NO. 3 & 2 (LATEST ISSUE)

ALT MATERIAL :-
TO SPECN. BS 970 Pt.1 Sec.2 Gr.080 M 40 HARDENED & TEMPERED TO 250-300 H.V.(42·5-47·5 HRD.)

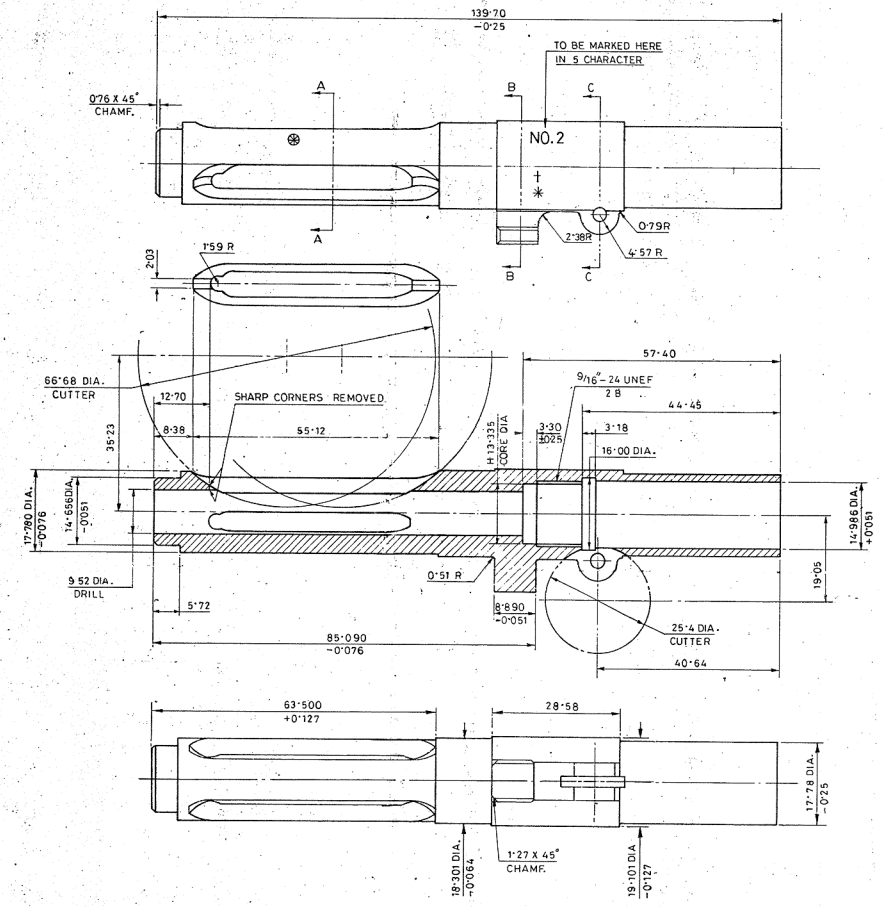

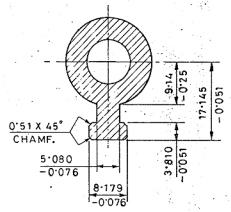

SECTION:-B-B

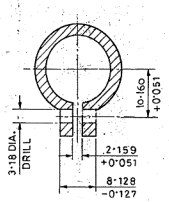

SECTION:- C-C

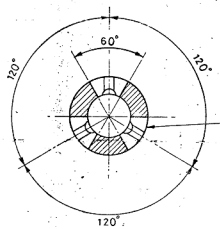

SECTION:- A-A

MARK ON WHERE INDICATED.
† Yr. OF MANUFACTURE
✱ MANUFACTURERS CODE } LETTER SIZE 2mm
⊛ D.S.CAT NO. LETTER SIZE 3mm

NOTE:-
ACCEPTANCE STANDARDS FOR MACRO ETCH TEST AND MICROSCOPIC DETERMINATION OF NON METALLIC INCLUSIONS FOR STEEL
I) MACRO ETCH TEST AS PER ASTME 381 WITH ACCEPTANCE STANDARD AS C2, R2, S2
II) NMIR TEST AS PER IS: 4163-82

FOR SPECN. LATEST ISSUE SHOULD BE FOLLOWED

NOTE:-
HEAT TREATMENT, PROTECTIVE FINISH & PHOSPHATING ETC. WILL BE DONE AT ORDNANCE FACTORY, TIRUCHIRAPPALLI.

NOTE:-
COMPONENT TO BE MANUFACTURED FROM FORGING TO DRG.NO. S.K. 1185F

DIMENSIONS ARE IN mm.
UN TOLERATED DIMENSIONS AS PER IS:2102 (MEDIUM)

ICR.1576

ITEM NO.	DESCRIPTIONS	NO OFF	MATERIAL	TREATMENT	REMARKS
			AS ABOVE	—	—

SIGNATURE & DATE		SUB: WHITE FINISHED BLANK	SCALE: 2:1
DRAWN		FOR: ELIMINATOR FLASH NO.2.	STORE DRG NO D.S.CAT. No. 1005-0015.26
CHECKED		OF: RIFLE 7·62 mm. 1A1.	
TRACED		DES. REF NO: —	OPERATION NO —
TRACING CHECKED		DRG. NO: TEND-1692	
I/C DESIGN & DRG. OFFICE	APPROVED ON: 12/2/83	DIVISIONAL OFFICER	ORDNANCE FACTORY, TIRUCHIRAPALLI. SHEETS: 1 SHEET NO: 1

AMENDMENTS | SIGNATURE & DATE

SL 15