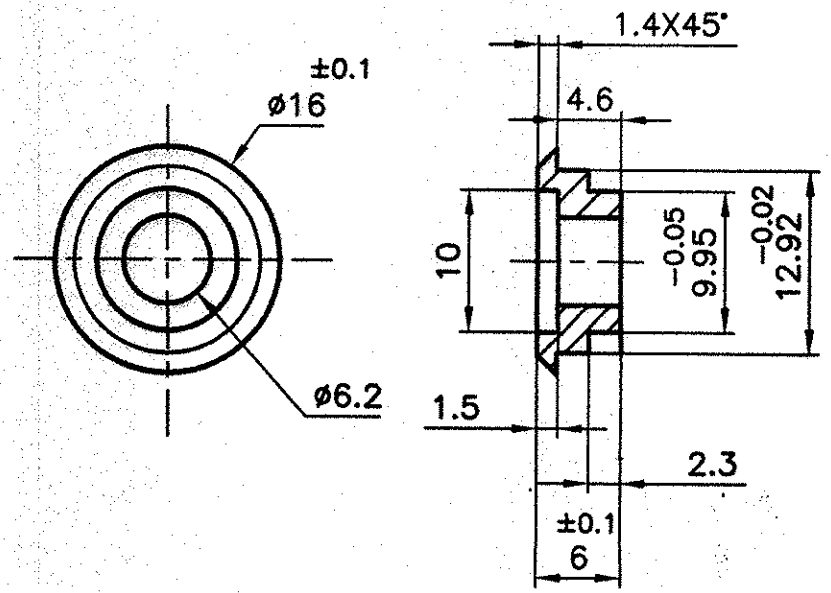


MATERIAL : IS: 5517 –1993, GRADE:42Cr4Mo2
(OR) BS:970 PART–3, 1991, GRADE :709M40
ALTERNATE MATERIAL : En19 (OR) En19A.

HARDNESS: 32 – 38 HRC

DIMENSIONS ARE IN mm.
UNTOLERATED DIMNS. AS PER IS : 2102 (MED)
PROTECTIVE FINISH : PHOSPATED TO SPECIFICATION:
JSS : 0465–01–1988 CLASS–I (ACCELERATED) OIL FINISH.

| PART NO. | DESCRIPTIONS | NO OFF | MATERIAL | TREATMENT | REMARKS |
|---|---|---|---|---|---|
| | | | | | |

| | SIGNATURE & DATE. |
|---|---|
| TRACED | |
| DRAWN | S. Venkatesh |
| CHECKED | |
| HOS/D&DO | |
| NODAL OFFICER/ FOR MGL. | |
| OFFICER/ D&DO | |
| APPROVED ON. 25/02/2015 | |

SUB: WASHER STOCK BUTT L.H.
FOR: STOCK BUTT S/A
OF: 40 mm MGL
DES.REF.NO.
DRG. No.: 30P 5016

ORDNANCE FACTORY
TIRUCHIRAPPALLI–16.

SCALE 2:1
STORE DRG.NO.
OPERATION NO.
SHEETS: 1
SHEET No.: 1

AMENDMENTS | SIG. & DATE