DRAWING NUMBER
307-16-2

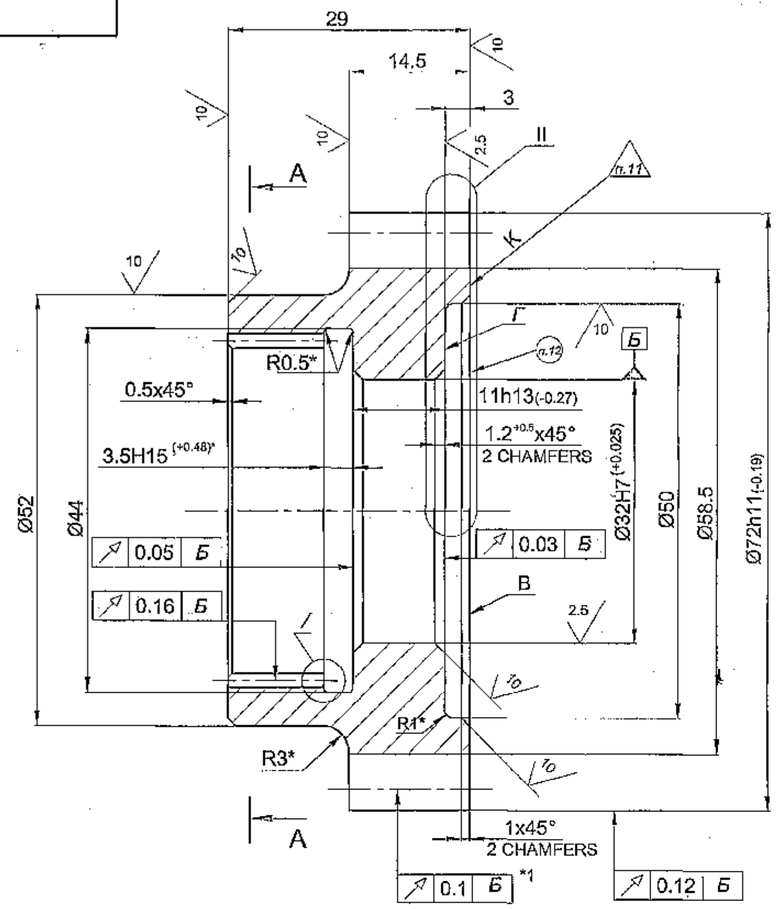

1. INSPECTION GROUP III AS PER TT-01
2. GEAR TEETH AND SURFACE 'B' TO BE CARBURISED, FOR TEETH h 0.6...0.9 MM HRCэ≥59,SURFACE 'B' h =0.3 MM, HRCэ≥55 .
3. FOR THE SURFACES NOT TO BE CARBURISED, MAINTAIN 28...42 HRCэ.
4. UNSPECIFIED LIMIT DEVIATIONS OF DIMENSIONS H14, h14,± IT14/2.
5. GEAR TEETH EDGES ARE TO BE ROUNDED OFF WITH A RADIUS OF 0.2 MM OR PROCEED BY CHAMFERING 0.2x45°
6. PARTS TO BE CHECKED BY MAGNETIC DEFECTOSCOPE. TECHNICAL REQUIREMENTS AND CONDITION FOR ACCEPTANCE ARE ACCORDING TO TT ИВ-17.
7. QUALITY OF TEETH MESHING IS CHECKED FROM THE IMPRINT BY 'BLUING' DURING RUN-IN WITH TOOTHED RING INSTRUMENT ACCORDING TO INSTRUCTION ИВ-42.
8. INSPECTION OF LENGTH OF OVER ALL NORMAL IS CARRIED OUT IN THE CASE OF THE ABSENCE OF ANY CHECKING OF VARIATION LIMIT OF INTER -AXIS DISTANCE WITH TOOTHED RING INSTRUMENT.
9. CARBURIZING ON ALL SURFACES TO A DEPTH UPTO 0.9 MM IS ALLOWED EXCEPT THE SLOTS AND SURFACE 'Г'.
10. DURING DESPATCH AS SPARES CHEMICALLY OXIDIZED, OILED COATING IS ALLOWED.
11. STAMP WITH ELECTRICAL ETCHING METHOD OR ELECTRO CHEMICAL METHOD AS PER INSTRUCTION PM-32.
12. MARK THE FACTORY - AND MANUFACTURER'S SYMBOL AND PART SYMBOL BY ELECTRICAL ETCHING METHOD DURING THE DESPATCH AS SPARES.
13. * DIMENSION TO BE ENSURED BY TOOL.
14. *1 IN THE ABSENCE OF RUNNING-IN, INSPECT WITH TOOTHED RING MEASURING INSTRUMENT.

5 (√)

MODULE		m	3
NUMBER OF TEETH		z	22
NORMAL BASIC RACK		-	GOST 13755-81
COEFFICIENT OF ADDENDUM MODIFICATION CORRECTION		X	0
ACCURACY DEGREE AS PER GOST 1643-81.		-	
BASE TANGENT LENGTH		W	$23.07^{-0.03}_{-0.15}$
MEASUREMENT CLEARANCE OF OSCILLATION ON CENTRE TO CENTRE DISTANCE.	TOTAL ROTATION GEAR	F''_i	0.12
	TOOTH TO TOOTH	f''_i	0.05
TOLERANCE FOR CENTRE TO CENTRE DISTANCE.	TOP	E''_{as}	-0.09
	BOTTOM	E''_{ai}	-0.24
PITCH DIAMETER		d	66
PITCH CHORDAL THICKNESS OF TOOTH		$\bar{s}$	$4.71^{-0.03}_{-0.15}$
MEASUREMENT HEIGHT OF TEETH		$\bar{h}$	3.08
REFERENCE DRAWING		-	307-07-2

MODULE		m	1
NUMBER OF TEETH		z	41
BASIC RACK	PROFILE ANGLE	α	30°
	COEFFICIENT OF ADDENDUM	f'	
	COEFFICIENT OF DEDENDUM	f''	
	THICKNESS OF TOOTH ALONG THE PITCH LINE	S_{cp}	
ADDENDUM MODIFICATION CORRECTION		X_m	0
ROOT WIDTH		S	$1.57^{+0.25}_{+0.10}$
PITCH CIRCLE DIAMETER		d	41
DIAMETER OF ROLLERS		D_m	1.732
DISTANCE BETWEEN PINS		M_i	$38.47^{+0.45}_{+0.10}$

A-A (5:1)

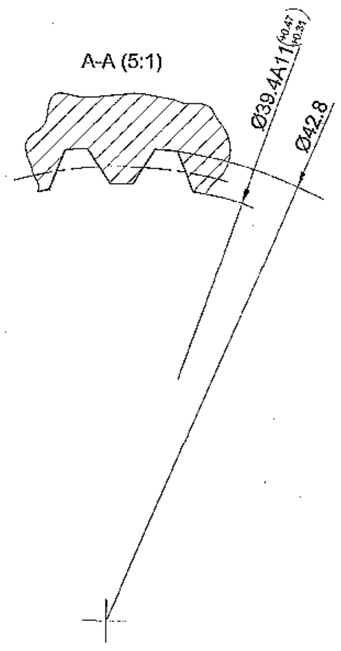

I DETAIL (4:1)

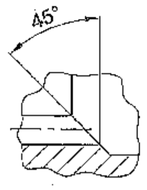

II DETAIL

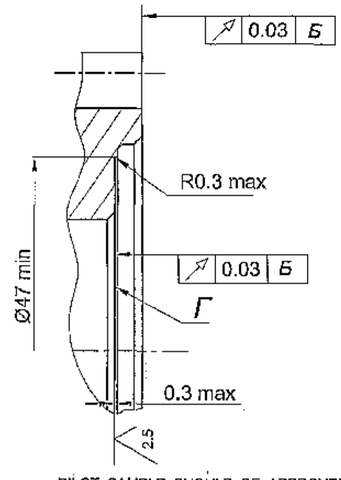

PILOT SAMPLE SHOULD BE APPROVED BY A H S P BEFORE BULK PRODUCTION.

EST. WT. (kg) 0.335

TO BE STAMPED OR MARKED WHERE INDICATED THUS # (LETTERS)

ALL SHARP EDGES AND CORNERS TO BE REMOVED UNLESS OTHERWISE STATED MACHINED CORNERS TO HAVE R OUT-SIDE R INSIDE EQUIVALENT CHAMFERS ARE PERMISSIBLE.

ISSUE	DATE	NATURE OF AMENDMENTS

DRN
CHD
APPD
DATE 22.12.07
SCALE:- 2:1
DIMENSIONS IN mm
TOLERANCE ON DIMNS UNLESS OTHERWISE STATED IS : 2102 - 69
ALL THREADS TO CONFORM TO

MATERIAL :- STEEL 12XH3A TY 14-1-381-72

USED ON :- Cb 307-04-1

CONTROLLERATE OF QUALITY ASSURANCE (HEAVY VEHICLES) AVADI

TITLE :- EXHAUST CAM SHAFT GEAR

D S CAT NUMBER

DRAWING NUMBER 307-16-2

DRAWING INDIANISED BASED ON RUSSIAN ORIGINAL ISSUE - 10
DRG. REPLACES 307-16-2, ISSUE-B , VIDE BK NO: 98-16
COMMON TO V-92S2

F-154 20/59

SIZE A2