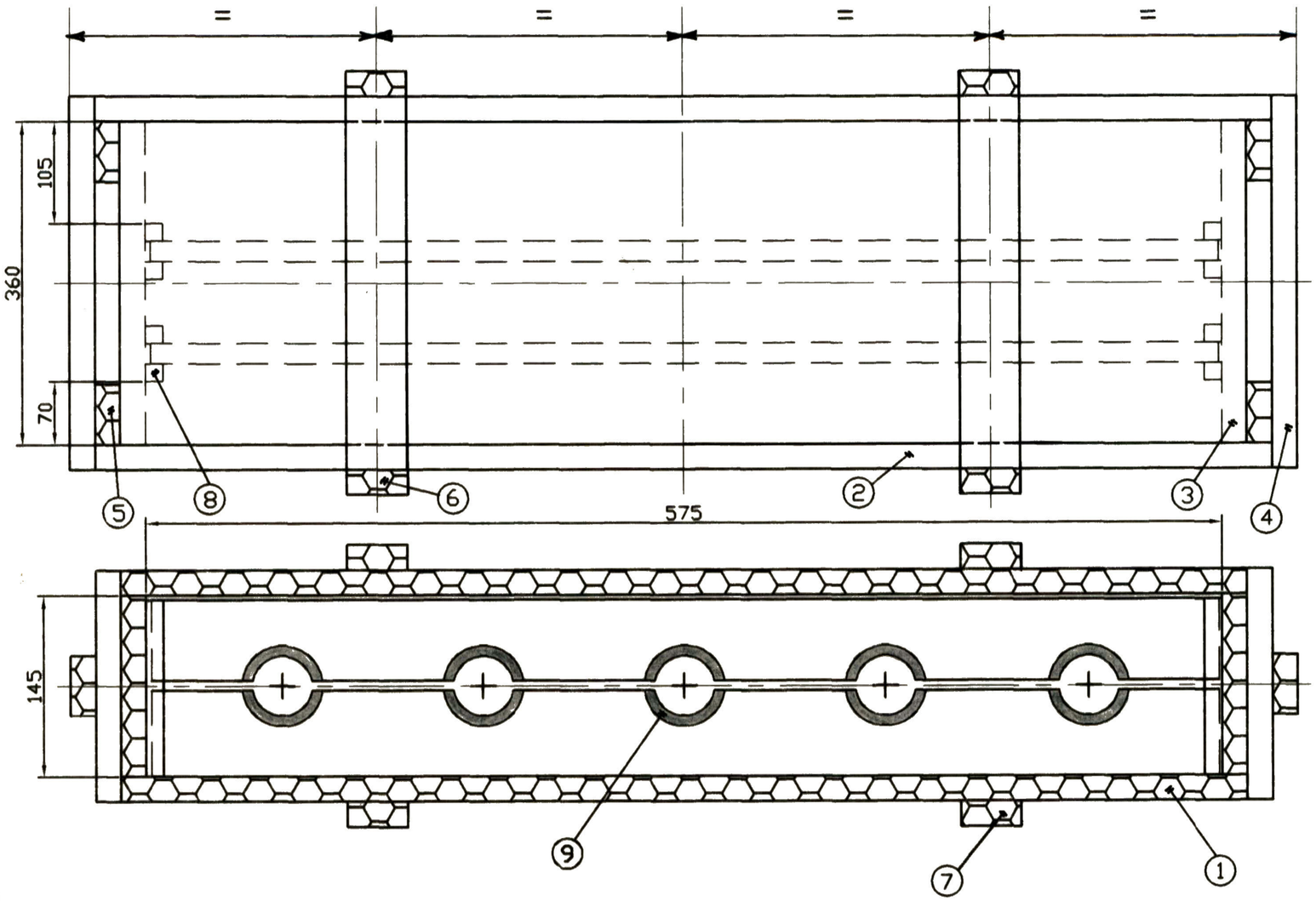

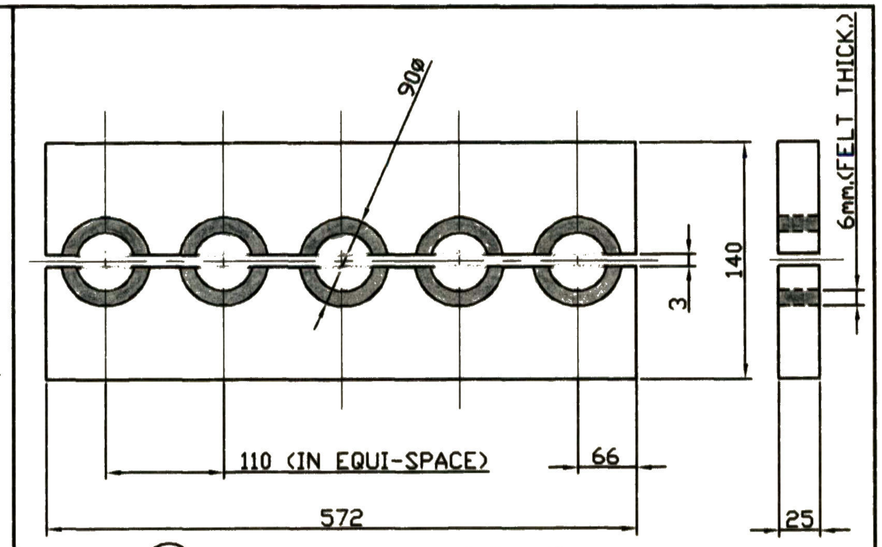

9 SUPPORT

NOTE :- EACH SUPPORT TO BE LOOSE FITTED IN BETWEEN TWO STRIPS ON BOTH SIDES.

NOTE :-

WOODEN SPECN. No.- CIGS / SS / 320 (a).

ALL WOODEN MEMBERS EXCEPT THE TOP PLANK SHOULD BE FIXED WITH SUITABLE NAILS AT 75mm. INTERVALS.

THE TOP PLANK SHOULD BE SCREWED UP WITH SUITABLE WOOD-SCREWS.

IN CASE OF TRADE FIRM SUPPLY, SAMPLE 2 Nos. (Min.) ARE TO BE SUBMITTED FOR INSPECTION BEFORE BULK SUPPLY.

TO HOLD 5 No. of Compts.

MATERIAL :- GURJAN / MANGO WOOD

ITEM NO.	No. OFF	DESCRIPTION	LENGTH	WIDTH	THICKNESS
9	2	SUPPORT	SEE IN DETAILS		
8	8	STRIPS	142	20	20
7	4	TOP & BOTTOM BATTENS	400	50	20
6	4	FRONT & REAR BATTENS	225	50	20
5	4	END BATTENS	185	50	20
4	2	HANDLES	400	50	20
3	2	END PLANKS	360	145	20
2	2	FRONT REAR PLANKS	655	145	20
1	2	TOP & BOTTOM PLANKS	615	400	20

DT.&SG.	DESCRIPTION
	DESCRIPTION IN HINDI LANGUAGE ADDED

AMENDMENTS

SCHEDULE NO :

SCALE : PROJECTION THIRD ANGLE

DRAWN BY : 22/01/02

CHECKED BY : 24-01-02

APPROVED BY : 24/01/02

CONCURRED BY (DGM/SHELL)

SIG. DATE 24.01.02

LIST OF PARTS

COMPT. 76/62mm.SRGM. SHELL TP VERSION

STORE DRG. No. X5088-001001 -201001 REV'D'

76/62 मि.मी एस.आर.जी.एम शेल टी.पी.टी प्रारूप के लिए प्रोजेक्ट ग्रेनेड के लिए लकड़ी का पैकिंग सन्दूक

WOODEN PACKING BOX FOR 76/62MM SRGM. SHELL TP VERSION

DRG. No. : CO - 428 A

M / C :

No. of SHTS.- 1

G. & S. FY. COSSIPORE

SHT. No.-- 1