AVNL_27 NOV 2023

DRAWING NUMBER 172.40.303 | SHEET No. 1 OF 2

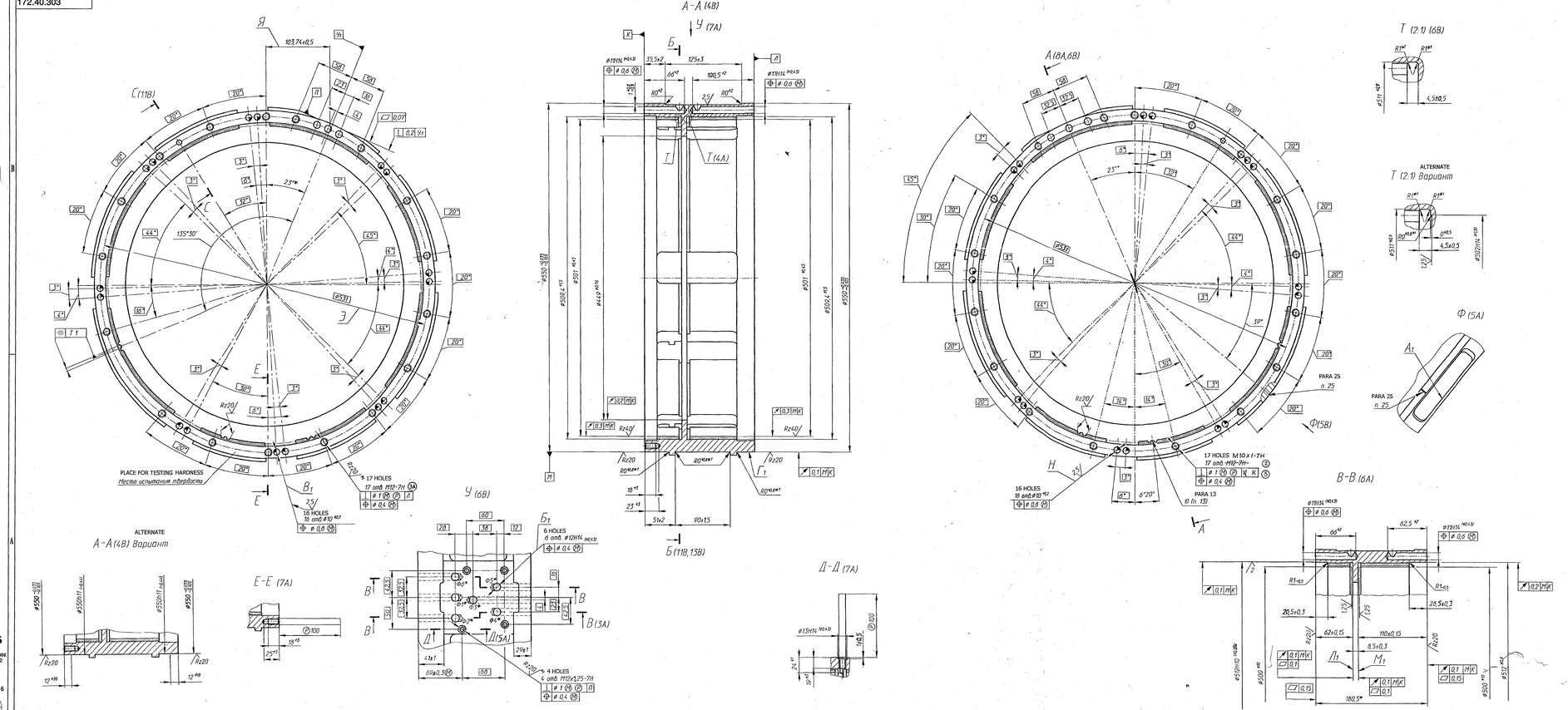

22. Ось установки механизма распределения.
23. Размер Я определяет положение точки пересечения оси Y_1 с окружностью Э от вертикальной оси (зона 7B).
24. Позиционный допуск осей отверстий $Б_1$ контролировать на глубину не менее 2 мм от поверхности Л.
25. Выполнить риску глубиной $0.5^{+0.3}$ мм.
26. * Размеры и обозначения для справок.
27. ** Размеры и шероховатость обеспечить инструментом.
28. Покрытие Хим. Фос. окс. прм или Хим. Окс. прм.
29. Остальные требования по 520.TУ1.

1. BHN 217...269. To be checked in blank.
2. Alternate material: Steel 30XC GOST 4543-71.
3. Incisions on surfaces Ж₁ and З₁ (area 14A) within the tolerance on dimensions H_1 (area 13A) and $Г_1$ (area 10B) are allowed.
4. Shoulders on surfaces Ж₁ with in the dimensions P_1 (area 13A) with length C_2 and height T_1 (areea14A) are allowed.
5. Dimension $Ф_1$ (area 10B) in 8 slots should be ensured at a length not less than 34mm,at,ohaaaat a distance not less than 10mm from the centre of hole H.
6. Nicks and dents are allowed on the surface of teeth with depth $0^{+0.3}$mm.
7. Base tangent length may be increased up to 171,79mm not more than by 10 teeth.
8. Teeth should be checked with complex gauge made as per maximum dimensions of mated components and centered along surface M. Instead of checking with complex gauge, depth variation may be checked, in this case difference measurement of depth of any pair of tooth should be $0^{+0.1}$mm. Difference in depth of teeth may be increased upto 0.6mm in one tooth space with slots on each side.
9. After making slots the remaining part of teeth at the tip should be with thickness not less than 1.6mm. Tooth with less thickness should be removed upto the surface of tooth space. Projection or sinking in of all removed tooth to be $0^{+0.5}$mm.
10. Deviation from flatness of surface П should be checked by blueing. In this case there should be not less than 8 spots over 1 cm².
11. Instead of deviation from flatness of surfaces $Л_1$ and M_1 full endplay (area 3A) may be checked.
12. In the holes H (area 4A) and B_1 (area 7A) surface finish Rz=20 microns in the area not more than 20% is allowed.
13. Tooth Ю should be removed over the entire length up to root circle (dedendum circle). Tolerance for symmetry of tooth Ю $0^{+0.5}$mm.
14. Mutual position of toothing is arbitrary (optional).
15. On surface $Г_1$ tolerance of radial run out may be increased up to 0.15mm over the entire arc $0^{+0.5}$mm (area 6A).
16. Local increase in tolerance of endplay of surface Л in the area of slot A_1 at 130mm arc upto 0,2mm (area 6A) is allowed.
17. In the threaded holes not more than two threads may be damaged at length not more than half of the diameter. Damage of first three threads is not allowed. Quality of holes with damaged thread should be not more than three on each side, in the case such holes should not be located near by.
18. Ovality of surfaces M and $Г_1$ by $0^{+0.1}$ mm is allowed. In this case average of minimum and maximum dimensions of ovality should be 549,965 - 549,895mm.
19. Deviation from alignment of hole H and B_1 should be checked by free passing of roller Ø9.975$_{-0.02}$ mm.
20. Passage of hole K_1 may be checked with ball $Ø7^{+0.5}$ MM.
21. Holes $Д_1$ and $Б_1$ should be drilled along the axis of tooth space nearer to hole K_1. Skiff of axis of hole $Д_1$ within the limits of tooth space with. Tolerance of intersection of axis of holes $Б_1$ and K_1 should be Ø1.5 mm (Gene 11A).
22. Y_1 is the axis of installing distribution mechanism.
23. Dimension Я determines the position of inter cross section point of axis Y_1 with circumference Э from vertical axis (area 7B).
24. Position tolerance for axis of hole $Б_1$ should be checked to a depth not less than 2mm from surface П.
25. Mark should be made with depth $0.5^{+0.3}$ mm.
26. *Dimensions and designation for reference.
27. **Dimensions and surface finish should be ensured by tool.
28. Coating: chemical phosphatizing, oxidizing, oil finish or chemical oxidizing, oil finish.
29. Other requirements are as per specification 520.TY1.

Module	M	3
Number of tooth	Z	168
Profile angle	α	20°
Co-efficient of addendum	h_a^*	0,7
Co-efficient of bottom clearance	C^*	0.2
Fillet radius	ρ_f	$0^{+0.03}$
Addendum modification coefficient	X	0
Base tangent length	W	170.80 $^{-0.12}_{-0.24}$
Reference circle diameter	d	504
Part no. of drawing of mated components		172.40.328

1. 217...269 HB. Допускается проверять в заготовке.
2. Материал-заменитель сталь 38XC ГОСТ 4543-71.
3. Допускаются заусы на поверхностях $Ж_1$ и $З_1$ (зона 14A) в пределах допусков на размер H_1 (зона 13A) и $Г_1$ (зона 10B)
4. Допускаются уступы на поверхностях $Ж_1$ в пределах размера P_1 (зона 13A), длиной C_2 и высотой T_1 (зона 14A).
5. Размер $Ф_1$ (зона 10B) в восьми пазах обеспечить на длине не менее 34 мм, в том числе на расстоянии не менее 10 мм от центра отверстия H.
6. Допускаются риски и забоины на поверхности зубьев глубиной $0^{+0.3}$мм
7. Допускается увеличение длины общей нормали до 171,79 мм не более, чем на восемь зубьев.
8. Зубья контролировать комплексным калибром, изготовленным по наибольшим размерам сопрягаемой детали и сцентрированным по поверхности M. Допускается вместо контроля комплексным калибром контролировать разновысокость зубьев, при этом разность измеренной высоты любой пары зубьев должна быть $0^{+0.1}$мм
Допускается увеличение разновысокости зубьев до 0,6 мм на одной впадине с каждой стороны пазов.
9. После выполнения пазов оставшиеся части зубьев у вершин должны быть толщиной не менее 1,6 мм. Зубья с меньшей толщиной удалить до поверхности впадин. Выступание или западание всех удаленных зубьев $0^{+0.5}$мм
10. Отклонение от плоскостности поверхности П проверять по краске, при этом должно быть не менее восьми пятен на 1 см²
11. Допускается вместо отклонения от плоскостности поверхностей $Л_1$ и M_1 контролировать полное торцовое биение (зона 3A)
12. Допускается в отверстиях H (зона 4A) и B_1 (зона 7A) шероховатость поверхности Rz=20 мкм на площади не более 20%.
13. Зуб Ю удалить на всей длине до окружности впадин. Допуск симметричности зуба $0^{+0.5}$мм
14. Взаимное расположение зубчатых венцов произвольное.
15. Допускается на поверхности $Г_1$ увеличение допуска радиального биения на 0,15 мм на общей дуге $0^{+0.5}$ мм (зона 6A).
16. Допускается местное увеличение допуска торцового биения поверхности Л в районе паза A_1, на дуге 130 мм, до 0,2 мм (зона 6A)
17. Допускается повреждение резьбы в резьбовых отверстиях не более двух ниток на длине не более половины диаметра. Не допускается повреждение первых трех ниток резьбы. Количество отверстий с поврежденной резьбой должно быть не более трех с каждой стороны, при этом такие отверстия не должны быть расположены рядом
18. Допускается овальность поверхностей M и $Г_1$ $0^{+0.1}$мм, при этом полусумма наименьшего и наибольшего размеров овала должна быть 549,965-549,895 мм
19. Отклонение от соосности отверстий) H и B_1 контролировать свободным прохождением валика Ø9.975$_{-0.02}$ мм.
20. Допускается контролировать проходное сечение отверстия K_1 шариком Ø7$^{+0.5}$мм
21. Отверстия $Д_1$ и $Б_1$ сверлить по оси впадины зуба ближайшей к отверстию K_1 с выходом в отверстие K_1 (смещение осей отверстий $Д_1$ в пределах ширины впадины зуба. Допуск пересечения осей отверстий $Б_1$ и K_1 Ø1,4 мм (зона 11A)

PILOT SAMPLE SHOULD BE APPROVED BY A H S P BEFORE BULK PRODUCTION.

EST. WT. (kg) 42	TO BE STAMPED OR MARKED WHERE INDICATED THUS # (LETTERS)

ALL SHARP EDGES AND CORNERS TO BE REMOVED UNLESS OTHERWISE STATED MACHINED CORNERS TO HAVE R OUTSIDE R INSIDE EQUIVALENT CHAMFERS ARE PERMISSIBLE.

ISSUE	DATE	NATURE OF AMENDMENTS
3A	29.10.10	D.O. CORRECTION
3	24.10.2007	ИЗМЕНЕНИЯ No. 1&8-11,5-04
2	21.5.06	V.C.R.S. No. 4.2.6

DRN	
CHD	
APPD	
DATE	03-12-06
SCALE:- 1 : 2	
DIMENSIONS IN mm TOLERANCE ON DIMN UNLESS OTHERWISE STATED IS: 2102-69	
ALL THREADS TO CONFORM TO	

MATERIAL:- STEEL 30XГ CA GOST 4543-71

USED ON:- 172.40.0-3CD

CONTROLLERATE OF QUALITY ASSURANCE (HEAVY VEHICLES) AVADI

TITLE:- LEFT HAND DRUM

D S CAT NUMBER

DRAWING NUMBER 172.40.303

356 SUPPLY CODE U-01-1-2

D90056

F-77 2

SIZE A2x4

DRG. INDIANISED BASED ON RUSSIAN ORIGINAL ISSUE-1

Sl no.	Nomenclature & drawing No.	Manufacturing technology & Testing / Inspection Facilities required to produce the item		Must be possessed by the vendor in his premises (P&M list and testing / inspection equipment list to be submitted)	May be possesed by the vendor in his premises or out sourced (Self declaration to be submitted)	FIRM Comp-liance (Y/N)	Remarks
1 2 3 4 5 6	172.40.302 MIDDLE DRUM RH 172.40.303 MIDDLE DRUM LH 175.40.017-1 MIDDLE DRUM RH 175.40.018-1 MIDDLE DRUM LH 172.40.300 DRUM RH 172.40.301 DRUM LH	TECHNOLOGY-I	Turning	CNC Turning dia 600mm suitable to accommodate component of diameter in the range of dia500 to 600mm with 0.010mm accuracy			
			Milling & Drilling	HMC and/or VMC suitable to the components upto the size 600mm diameterwith 0.010 accuracy			
			Gear Shaping		Gear Shaping of Mod 5 x 510 pcd with gear cutting accuracy of class of Din 7 or better accuracy		
		TECHNOLOGY-3	Hardening & Tempering		Hardening & Tempering furnace with Oil quenching facility		
			Protection coating		Oxidising Plant		
		TECHNOLOGY-4	Raw material		Firm should be capable to arrange the raw material like Forging as per drawing specification and standard.		

(LUXMAN SINGH)
WM/TRG,HT & EP

(D.GNANASAMBANDAN)
JWM/QA(OE -TRG)

(K.DURAIRAJ)
JWM/Trans

RESTRICTED
(DRAFT/PROVISIONAL)
QUALITY ASSURANCE PLAN

FOR

(LEFT HAND DRUM)

DRG.NO. 172.40.303

(LF NO: 6201040037)

No HVF/T-72C/QAP/40/LEFT HAND DRUM/242586 - 00

ISSUE No: 00 **DATE: OCT– 2021**

QUALITY ASSURANCE (RIG–SUB ASSEMBLY)

HEAVY VEHICLES FACTORY

AVADI CHENNAI – 600 054

QUALITY ASSURANCE PLAN (QAP)

FOR

LEFT HAND DRUM

DRG. NO. 172.40.303

PREPARED BY

(C.NANDA KUMAR)
JWM/QA (RIG-SA)

REVIEWED BY

(HANUMANTHA RAO GOLLA)
JWM/QA (RIG-SA / TA)

APPROVED BY

(SUBHAM BIJLWAN)
AWM/QA-RIG-(SA)

ISSUED BY

QUALITY ASSURANCE (RIG- SUB ASSEMBLY)
HEAVY VEHICLES FACTORY
AVADI CHENNAI – 600 054

Sl. no	CONTENTS	PAGE .No.
1.	IMPORTANT NOTES	4
2.	INTRODUCTION	4
3.	AIM	4
4.	SCOPE	5
5.	DOCUMENTS	5
6.	ITEM USED ON	6
7.	LIST OF DRAWINGS	6
8.	BILL OF MATERIAL	6
9.	CONDITIONS OF USE/ STORAGE INSTRUCTIONS	6
10.	SAMPLING PLAN	7
11.	VISUAL INSPECTION	7
12.	DIMENSIONAL CHECKS	8
13.	MATERIAL CHECKS	8
14.	ACCEPTANCE / PERFORMANCE TESTS	9
15.	FITMENT AND PERFORMANCE TEST	11
16.	INTERCHANGEABILITY	11
17.	CALIBRATION CHECKS	11
18.	MARKING/IDENTIFICATION	11
19.	PRESERVATION CHECK	12
20.	PACKING CHECK	12
21.	DOCUMENTATION	12
22.	REFERENCE	12
23.	ANNEXURE-A	13
24.	FIGURE	14
25.	APPENDIX-A	15

1.IMPORTANT NOTE

Note-1

This is only a provisional and will be amended from time to time according to the requirement. No addition, deletion and reproduction will be done without permission of The Sr. General Manager, Heavy Vehicles Factory, Avadi, Chennai – 54.

Note –2

Any instruction contained in this does not prejudice the terms and conditions of the contract what so ever. In case of any contradiction between the contents of this QAP and the clause in the contract, the latter will prevail.

Note-3

The stores should be manufactured strictly only as per the drawings supplied by the Inspection Authority and not as per the samples, if any received by the manufacturer for guidance purpose.

Note-4

Any amendment issued by the Inspection Authority shall be incorporated in the QAP and the records for the amendments carried out should be maintained as per the Performa at Appendix-"A".

Note-5

In case of any contradiction between the contents of this QAP and drawings issued along with the contract, the latter will prevail.

2.INTRODUCTION

1. This quality plan lays down the inspection and testing procedure to be carried out on the component **LEFT HAND DRUM TO DRG.NO 172.40.303** being procured indigenously. This is prepared, based on the acceptance standards and inspection parameters laid down in collaborators documents and on the inspection test standards followed in respect of similar indigenous items.
2. This QAP is the property of Government of India and is liable for amendments as and when required. The Sr. General Manager, Heavy Vehicles Factory, Avadi, Chennai – 600 054, is the inspecting Authority for this assembly. Any query / clarification on the content of this QAP shall be referred to this Factory. Any departure from these instructions is allowed only after written approval from the above authority. Notwithstanding the tests indicated in this QAP, the inspecting Officer has the right to carry out any test to check conformance to the paper particulars quoted in the Supply Order, which he may consider necessary to satisfy himself about the stores which he has to accept.

3.AIM

The QAP is aimed at standardizing the Inspection procedure and acceptance norm for **LEFT HAND DRUM TO DRG.NO:172.40.303.**

It also aims at giving adequate information to the manufacturer on the quality requirements so that the required quality control methods are established. This is also meant to guide authorized Inspection Officer in his routine inspection and to set out main points to which his attention must be drawn to ensure that the accepted stores meet the stipulated standards.

4. SCOPE:

This QAP outlines in general terms, the checks and methods to be used during inspection of **LEFT HAND DRUM TO DRG. NO. 172.40.303** including the technical requirements of the drawings. The recommended Quality Plan stipulated herein is mandatory and should be strictly adhered to.

For inspection purpose, only the latest issue of this QAP will be made applicable and copies of this QAP can be obtained from the issuing authority i.e. The Sr. General Manager, Heavy Vehicles Factory, Avadi, and Chennai.

NOTE-I:

i. Tender enquiry (TE) and supply order (S.O) will be issued with QAP stating that inspection will be done as per QAP.

ii. In case of TE, It is responsibility of the vendor to obtain the copy of QAP and give the statement of compliance that vendor will abide by the QAP in case supply order is placed.

iii. In case of S.O, it is the responsible of the vendor to obtained copy of QAP and give the statement of compliance that the vendor will follow QAP. However, GM/HVF reserves the right to revise/update the QAP from time to time.

5. DOCUMENTS:

a) On placement of firm supply order, One set of relevant specification and technical instructions on the subject item can be obtained by the contractor from AHSP through DDO/HVF

b) Any clarification required on these documents should be obtained from the Inspecting Authority i.e. The Sr. General Manager, Heavy Vehicles Factory, Avadi, Chennai – 600 054. Equivalents to the collaborators specifications and standards will be decided only by the Inspecting Authority and should not be unilaterally decided. For any change in the specifications, standards or written approval, any alterations in specification can be affected and not otherwise.

c) The process instruction sheets supplied by the collaborators are available with the Authority Holding Sealed Particulars, i.e. The Controllerate of Quality Assurance (Heavy Vehicles), Avadi, Chennai for the reference. The relevant process sheets may be studied at the premises of the AHSP after obtaining necessary permission.

d) The supplier after scrutiny of the concerned process sheets and connected paper particulars should establish the necessary production and inspection facilities. Particularly the inspection test rigs, stands, fixtures, template, gauges etc should be provided as recommended in these process sheets. If process

sheet / Process Book is not available the details particulars/parameters available in the drawings to be strictly adhered.

6. ITEM USED ON:

1. 172.40CB-2CB -

7. LIST OF DRAWINGS:

SI. NO.	DRG. NO	NOMENCLATURE	REMARKS
1	172.40.303	LEFT HAND DRUM	-

8. BILL OF MATERIALS: (Individual items as mentioned in table to Para 7)

SI. NO	DRG. NO	NOMENCLATURE	MATERIAL SPECIFICATIONS	Qty
1	172.40.303	LEFT HAND DRUM	STEEL 30ХГСА GOST 4543-71	1

Note: Vendor / Contractor may use approved alternate material if any specified in drawing/ specification.* Also refer Para no.13.

9. CONDITIONS OF USE/STORAGE INSTRUCTIONS

This assembly/item should be properly packed to protect from transit / handling damage and influence of atmospheric precipitations. In addition, the following parameters should be ensured:

(a) The threaded parts if any should be covered with suitable plastic caps to prevent damages.

(b) If the item consists of assemblies, each assembly should be packed separately.

(c) The stores are to be suitably covered for preventing ingress of dust and Dirt/entry of sunlight / moisture.

(d) The packaging slip shall contains

- (i) Certificate of testing- NABL Certificate.
- (ii) Guarantee/ Warranty Certificate
- (iii) Service and maintenance instructions
- (iv) Delivery Slip with Inspector's Acceptance Mark
- (v) Undertaking letter / certificate of conformance. (as applicable)

(e) The stores are not permitted to be stored together with oils. Petrol, acids, alkaline and other substances to avoid damage to the metal / rubber components.

10. SAMPLING PLAN:

Sl. No.	Sampling Plan	Pilot	Bulk
(i)	Visual Inspection	100%	100%
(ii)	Dimensional Inspection	100%	General Inspection level III, single sampling, Normal Inspection, AQL 2.5 of IS 2500 (Part-I)-2000
(iii)	Material Inspection	1 No	1 No. for each batch of raw material or heat treatment lot as required by specifications.
(iv)	Acceptance test	100 %	100 %
(v)	Pressure testing	------	--------
(vi)	Machining/Fitment/ Performance trial on higher assembly / Tank	01 No.	01 No. per batch / As required.
vii)	Interchangeability Test	02 Nos.	02 Nos. per batch on randomly basis, except selective assembly.
viii)	Test stand/Jigs/ Fixtures/Gauges/Mandrels/etc.	100 %	100 %
ix)	Marking/Identification	100%	100%
x)	Packing/ Preservation	100%	100%

Note:-

A New (First time supplier of this item) supplier should obtain clearance from HVF for bulk production which will be issued only after inspection/evaluation of pilot samples by HVF.

11. VISUAL INSPECTION[Sampling plan as per Para- 10 (i)]

The stores are to be visually examined on 100 % of pilot /bulk and same should be free from any defects and all the finishing requirements shall satisfy as indicated in technical conditions of the assembly / component drawing.

The components shall be checked for the following and should be free from the defects:

- Defects in construction
- Cracks/Dents/Scratches
- Fitment of all components
- Presence of foreign particles
- Moisture and dust
- Corrosion of metal parts
- Mechanical imperfections & distortion
- Any form of deterioration of material and finishing.

Packing and preservation should be ensured as per drawings/relevant TY specification (To be ensured on receipt at consignee end).

12. DIMENSIONAL CHECK [Sampling plan as per Para- 10(ii)]

The dimensions of individual component, sub assembly and major assembly shall be checked and ensured as per respective drawing. Dimensional check should be carried out as per sampling plan. However, the inspecting authority/rep. may at his discretion, tighten the inspection level and acceptance quality level on the critical items and adopt check point during manufacture.

12.1 LEFT HAND DRUM TO DRG.NO 172.40.303

1. All dimensions should be confirmed as per drawing.
2. Surface finish/Roughness should be confirmed as per drawing and specification.
3. Place for testing hardness (Refer Drawing).
4. Refer drawing / specification for admissible alternate manufacture in dimensions/material if any specified for the component.

13) MATERIAL CHECKS [SAMPLING PLAN AS PARA – 10 (iii)]

Material specimen /test bars of the components shall be in conformity as per the material mentioned in the relevant documents/drawing. NABL test reports for all the parameters as per relevant specifications to be submitted. Test samples to be submitted by the vendor to HVF, if required. The material check will be carried out as per sampling plan.* However, if the manufacturer proposes any alternative material at the stage of tender enquiry, the same has to be approved and a written concurrence should be obtained from AHSP through DDO/HVF, before usage of such materials.

13.1 LEFT HAND DRUM TO DRG.NO.172.40.303

a) The component should be manufactured from STEEL 30ХГСА GOST 4543-71.

b) Chemical properties: As per Steel 30ХГСА to GOST 4543-71.

CONTENT OF ELEMENTS%							
C	Si	Mn	Cr	S	P	Cu	Ni
				MAX			
0.28 to 0.34	0.9 to 1.2	0.8 to 1.10	0.8 to 1.10	0.025	0.025	0.30	0.30

Note: For mass fraction of other elements refer GOST 4543-71.

c) Mechanical properties: As per STEEL GRADE 30ХГСА to GOST 4543-71.

Yield point, N/mm^2 / (kgf/mm^2)	Ultimate strength, N/mm^2 (Kgf/mm^2)	Elongation %	Relative reduction of area %	Impact strength KCU / (Kgm/cm^2)
Not less than				
(835) 85	1080 (110)	10	45	(49) 5

Note: For other parameters refer GOST 4543-71.

14) **PERFORMANCES / ACCEPTANCE TEST: LEFT HAND DRUM TO DRG.NO: 172.40.303**

1. BHN 217...269. To be checked in blank.
2. Alternate material: Steel 38XC GOST 4543-71.
3. Incisions on surfaces Ж$_1$ and З$_1$ (area 14A) within the tolerance on dimensions H$_1$ (area 13A) and П$_1$ (area 10B) are allowed.
4. Shoulders on surfaces Ж$_1$ with in the dimensions P$_1$ (area 13A) with length C$_1$ and height T$_1$ (area14A) are allowed.
5. Dimension Ф$_1$ (area 10B) in 8 slots should be ensured at a length not less than 34mm, out of which at a distance not less than 10mm from the centre of hole H.
6. Nicks and dents are allowed on the surface of teeth with depth $0^{+0,2}$mm.
7. Base tangent length may be increased up to 171,79mm not more than by 10 teeth.
8. Teeth should be checked with complex gauge made as per maximum dimensions of mated components and centered along surface M. Instead of checking with complex gauge, depth variation may be checked, in this case difference measurement of depth of any pair of tooth should be $0^{+0,4}$mm. Difference in depth of teeth may be increased upto 0,6mm in one tooth space with slots on each side.
9. After making slots the remaining part of teeth at the tip should be with thickness not less than 1.6mm. Tooth with less thickness should be removed upto the surface of tooth space. Projection or sinking in of all removed tooth to be $0^{+0,5}$mm.
10. Deviation from flatness of surface П should be checked by blueing. In this case there should be not less than 8 spots over 1 cm^2.
11. Instead of deviation from flatness of surfaces Л$_1$ and M$_1$ full endplay (area 3A) may be checked.
12. In the holes H (area 4A) and B$_1$ (area 7A) surface finish Rz=20 microns in the area not more than 20% is allowed.
13. Tooth Ю should be removed over the entire length up to root circle (dedendum circle). Tolerance for symmetry of tooth Ю $0^{+5,5}$mm.
14. Mutual position of toothing is arbitrary (optional).
15. On surface Г$_1$, tolerance of radial run out may be increased up to 0.15mm over the entire arc 0^{+200}mm (area 6A).
16. Local increase in tolerance of endplay of surface Л in the area of slot A$_1$ at 130mm arc upto 0,2mm (area 6A) is allowed.

17. In the threaded holes not more than two threads may be damaged at length not more than half of the diameter. Damage of first three threads is not allowed. Quality of holes with damaged thread should be not more than three on each side, in the case such holes should not be located near by.
18. Ovality of surfaces M and $Г_1$ by $0^{+0,1}$ mm is allowed. In this case average of minimum and maximum dimensions of ovality should be 549,965 - 549,895mm.
19. Deviation from alignment of hole H and B_1 should be checked by free passing of roller Ø9.975 $_{-0,02}$ mm.
20. Passage of hole K_1 may be checked with ball Ø$7^{+0,5}$ MM.
21. Holes $Д_1$ and E_1 should be drilled along the axis of tooth space nearer to hole K_1. Shift of axis of hole $Д_1$ within the limits of tooth space with Tolerance of intersection of axis of holes E_1 and K_1 should be 0 ± 4 mm (Zone 11A).
22. Y_1 is the axis of installing distribution mechanism.
23. Dimension Я determines the position of inter cross section point of axis Y_1 with circumference Э from vertical axis (area 7B).
24. Position tolerance for axis of hole $Б_1$ should be checked to a depth not less than 2mm from surface П.
25. Mark should be made with depth $0,5^{+0,3}$ mm.
26. *Dimensions and designation for reference.
27. *1 Dimensions and surface finish should be ensured by tool.
28. Coating: chemical phosphotizing, oxidizing, oil finish or chemical oxidizing, oil finish.
29. Other requirements are as per specification 520.TY1.

GEAR DETAILS:

Module		M	3
Number of tooth		Z	168
BASIC CONTOUR	Profile angle	α	20°
	Co-efficient of addendum	h_a^*	0,7
	Co-efficient of bottom clearance	C^*	0,2
	Fillet radius	$ρ_f$	$0^{+0.3}$
Addendum modification coefficient		X	0
Base tangent length		W	$170.89^{+0.7}_{+0.4}$
Reference circle diameter		d	504
Part no. of drawing of mated components		172.40.328	

15) FITMENT AND PERFORMANCE TEST:

a. Pilot samples should be checked for fitment and Performance test to ascertain the efficacy of the system under different operating conditions by fitting in higher assembly and repeating it for functional checks, wherever required.

b. Items of Bulk supplies may be subjected to performance trial in tank in case of repeated failure/defects during exploitation.

EXPLANATORY NOTE:

1) Stage wise process and inspection of the component as specified in TD Book/ Process Book/ illustration book/specification is to be confirmed by the supplier during manufacturing the components.
2) Firm shall submit details of manufacturing process, inspection process and also reports for the same to HVF.
3) If required/applicable HVF shall witness/verify stage wise inspection /process details during manufacturing of the components.
4) The component may be subject to endurance test, when fitted in higher assembly as specified in process / illustration /TD book.

16) INTERCHANGEABILITY:

The assemblies/component should be interchangeable component wise and assembly wise, except the Component are to be supplied as a set and to be assembled selectively as per sampling plan.

17) CALIBRATION CHECKS (TEST STANDS/JIGS/FIXTUERS/GAUGES/INSTRUMENTS):

The supplier / Contractor should have suitable Instruments, Test Stand, jigs, fixture, mandrels and gauges to carry out quality checks, to ensure conformance of components/assembly as per drawing and Specification /T.R points.

The supplier/contractor should submit calibration reports for instruments/fixtures/gauges/mandrels etc., which are used during process of inspection activities.

18) MARKING/IDENTIFICATION

Marking of the items is to be carried out as called for in the relevant drawing, drawing/T.R points.

Inscription if any on the components is to be carried out as called for in the drawing/T.R points. Unless otherwise specified in the drawing/ specification, marking should not be carried out over the components.

For traceability, marking of part No., Manufacturer name, supply order No, Serial No/Qty, batch No. and manufacture date & year are to be carried out. Suitable method can be adopted, provided that the above parameters are legible and considering the parameters mentioned in the drawing and specification (Refer QAP Para No. 14(25)).

19) PRESERVATION CHECK

a) Preservative coatings are to be strictly adhered to as called for in the drawing. However, equivalent BIS Standards can also be followed, subject to the thickness of the coating/preservative is maintained as per the drawing/specification.

b) Other preservations as necessary to prevent damages due to moisture and dust during process, storage and transit are to be carried out. Conventional Methods can also be resorted to.

20) PACKING CHECK

Components / Assemblies are to be packed separately to avoid damages during transit / handling of the same. Part No. and No. of sets are to be marked on the packing.

Packing and preservation should be ensured as per drawings/relevant TY specification (To be ensured on receipt at consignee end).

Finished products shall be wrapped / packed using black and opaque polyethylene sheet or bags.

21) DOCUMENTATION

i. Firm has to maintain all the documents as per QAP with respect to the Sl.No.to have traceability.

ii. Vendor has to submit Bill of materials, Material test reports, Class 'C' /Endurance test reports (wherever specified in drawing/TY specification/QAP) and Complete PIR (pre-inspection report)at the time of offering the item for inspection. HVF will commence inspection only after scrutiny of these documents.

iii. The testing/inspection responsibility to test all the parameters as per QAP and drawing specifications as mentioned in Annexure -A (enclosed).

iv. Pre inspection reports (PIR) of firm like, 1. Chemical analysis (NABL Certificate), 2.Mechanical properties (NABL Certificate), 3. Pre-forming process, 4. Coating certification. 5. Calibration reports of instruments and 6. 100 % Dimensional inspection reports.

22) REFERENCE:

a) Drawing No: 172.40.303

b) Material specification as per drawing:

STEEL 30ХГСА GOST 4543-71.

c) GOST 4543-71.

d) Specification 520 TY1.

e) Alternate material:

STEEL 38XC GOST 4543-71.

ANNEXURE-A

SL. NO.	CATEGORY	ASSEMBLY/SUB ASSEMBLY	TESTS/INSPECTION PARAMETERS	STANDARDS TO BE REFERRED	ACCEPTANCE CRITERIA	INSPECTION RESPONSIBILITY			REMARKS
						Firm	HVF	DGQA	
1	LEFT HAND DRUM TO DRG. NO 172.40.303	**Pre inspection reports (PIR) of firm**	Firm has to produced all the document as per Para 21 (iv)	As per the relevant drawing and QAP.	Confirm to drawing and QAP as per bill of material	P	V	R	100% by firm/ vendor.
2		**Bill of material (BOM)**	Firm has to prepare the BOM as per QAP	Refer QAP Para no: 8 or item list.	Confirm to QAP.	P	V	R	100% by firm/ vendor.
3		**Material tests**	Chemical composition & Mechanical / Physical Properties	As per–GOST 4543-71.	All the values to confirm with QAP (Para no:13.1 (a), (b) & (c))	P	W/V	R	SP followed by HVF.
4		**Hardness checks**	Hardness (BHN) 217....269	Refer QAP Para no: 14(1)	Confirm to QAP Para no: 14(1)	P	W/V	R	SP followed by HVF.
5		**Coating checks**	Chemical Phosphotizing, Oxidizing, Oil finish or Chemical Oxidizing, Oil finish	Refer QAP Para no: 14(28)	Confirm to QAP Para no: 14(28)	P	W/V	R	SP followed by HVF.
6		**Dimensional checks**	Dimensions as per the drawing	Refer drawing /QAP Para no: 12.1	Confirm to drawing and QAP	P	W/P	R	100% by firm/ vendor SP followed by HVF.
7		**Marking / traceability**	Firm has to make marking / traceability records.	Refer QAP Para no: 18 & 14(25)	Confirm to QAP Para no: 18 & 14(25)	P	V	R	100% by firm/ vendor.
8		**Preservation & packing**	Firm has to make Preservation & packing records	Refer QAP Para no: 19 & 20	Confirm to QAP Para no: 19 & 20	P	V	R	100% by firm/ vendor.

Note:

For conformity of the items (Chemical/Physical/Mechanical properties).

1. One sample per heat / batch shall be tested under NABL Lab/Govt. Approved lab by firm. In case of non-compliance to standards entire lot shall be rejected or not to use in production further.

2. For cross conformation of material, manufacturer has to submit test sample pieces for the items used / test slab and button for rubber items / HVF will draw samples from supplied lot for Witnessing (W) at HVF premises. In case of non-compliance to standards entire lot will be rejected.

P- Perform **W- Witness** **V-Verify** **R-Review**

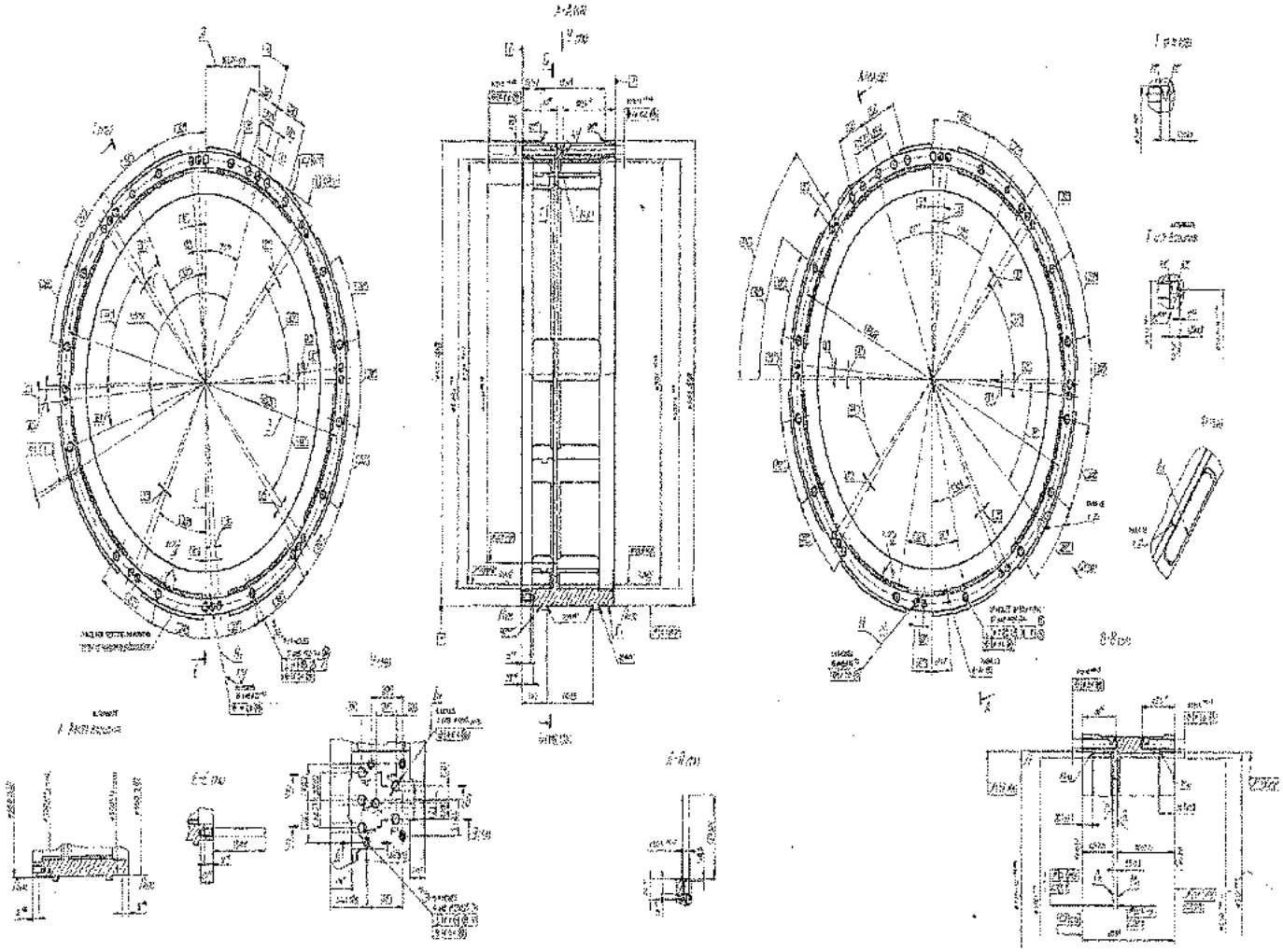

FIG: LEFT HAND DRUM TO DRG. NO 172.40.303
(For reference only)

APPENDIX ' A'

RECORD OF AMENDMENTS

Sl. No	Amendment No. & date	Amended by	Date of Insertion	Initial