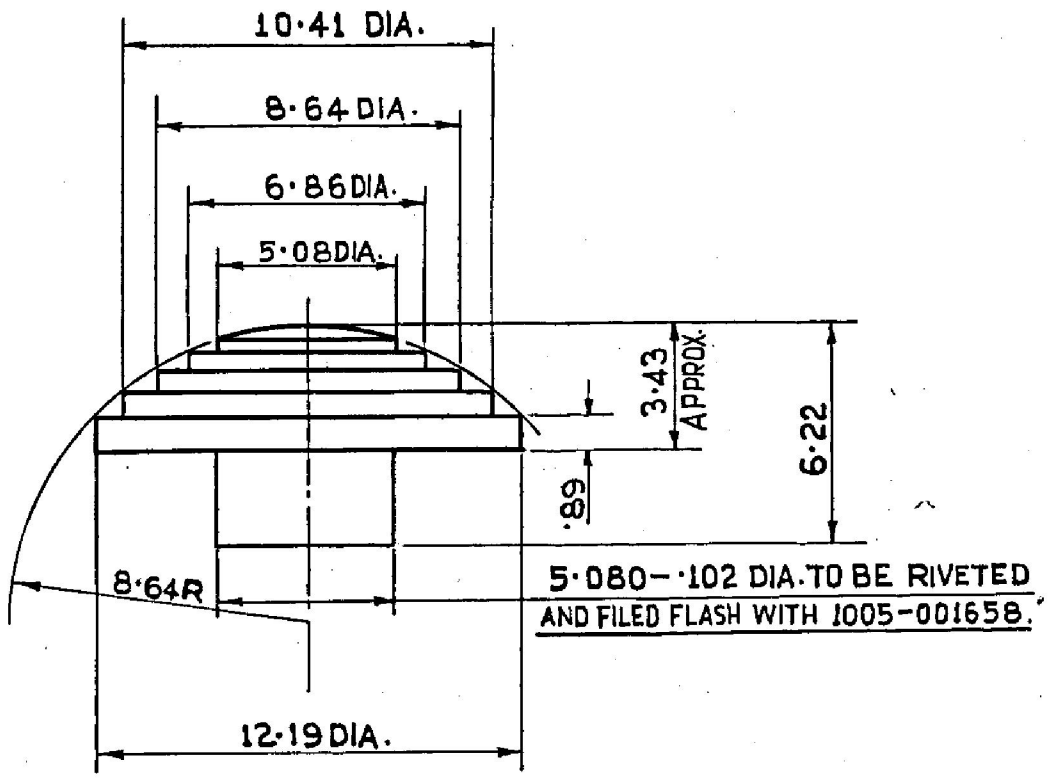

MATERIAL :–
STEEL BS 970 PT. 1 : 1983
Gr. 070 M20. COLD DRAWN.

FOR EXPLANATION SEE DD NOTE SHEET NO. 3.

PROTECTIVE FINISH:–
PROTECTIVE FINISH ON ASSEMBLY 1005-001655

NOTE :–
WHERE TOLERANCES ARE NOT SHOWN
DIMENSIONS IN WHOLE NUMBER OR WITH
ONE DECIMAL PLACE ± ·127 mm.
DIMENSIONS WITH TWO DECIMAL PLACES ± ·13 mm.

METRIC

AUTHY.	DATE	ZONE	BRIEF RECORD	SIG.
	9.2.89	20321-SA	CL. NEG. RE-TRACED & DRG. RE-SEALED	PKS 550
			PREVIOUS DC(I) NOS. 15026-SA, 16089-SA & 18530-SA	COPY.

	DATE	NAME
DGN.		
DRN.		
CHD.		
TRD.	3-2-89	
COMP	6.2.89	AKSen
DT. 7.2.89		I/C.D.O

SCALE:– 5 : 1

SEALED:– DC(I). 15026-SA. DT. 14.2.77.

ASSY. DRG. 1005-001655

MATERIAL:– AS STATED.

DIMENSIONS ARE IN MILLIMETRES.

KNOB LEVER LOCK

CQA(SA) ICHAPUR

APPROVED. DT. 27.11.76 (CL. NEG. RE-TRACED).

DESIGNER'S REF. RFI Sk No.–1594.

D.S. CAT. NO. 1005-001656

Create PDF files without this message by purchasing novaPDF printer (http://www.novapdf.com)