4-26941 Д 3Д6·007

ЕСКД

Rz20 (V)

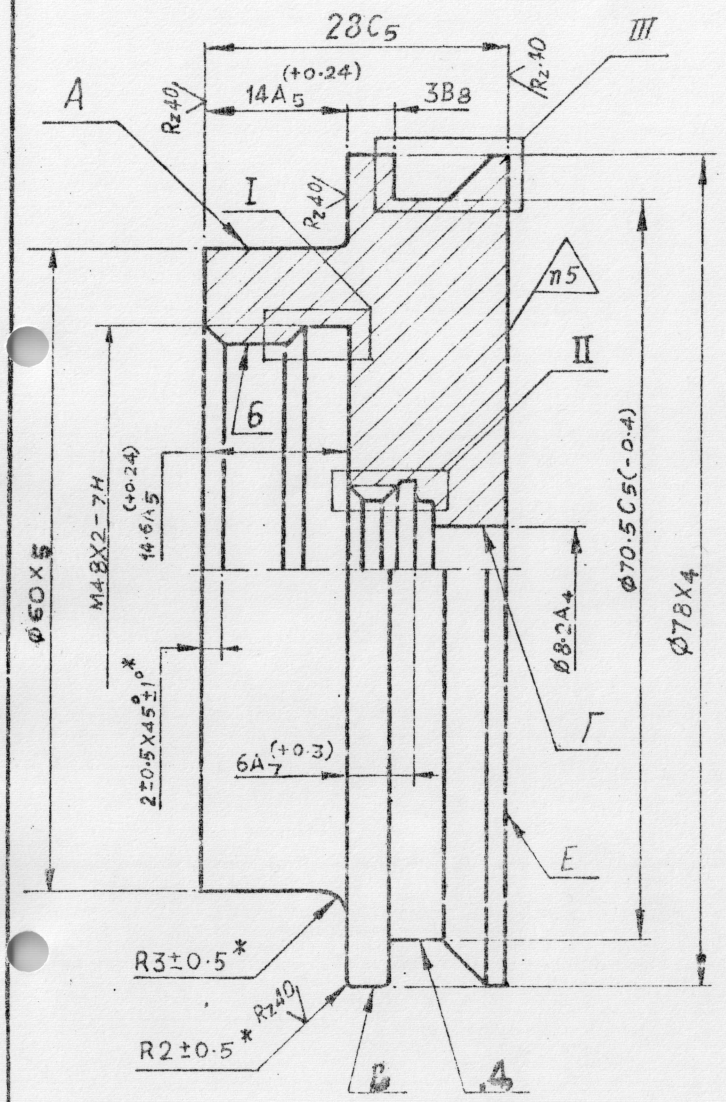

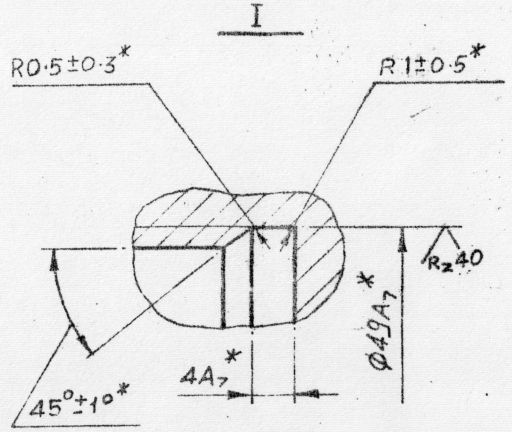

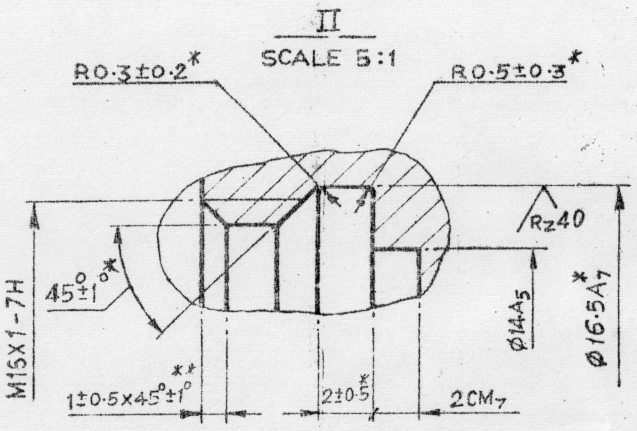

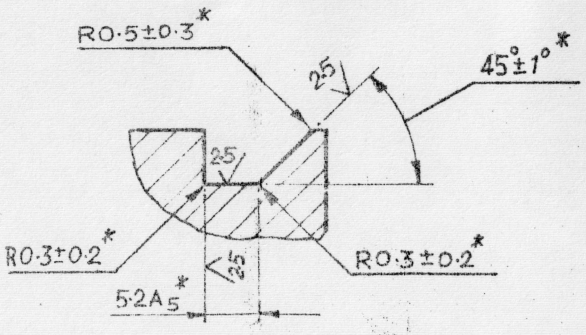

1. Permitted
   a) Rod Д16Т КР 80-П
   b) Rod Д16 КР 80 Н, Rod Д16 КР 80 П GOST 21488 - 76.
2. * Dimensions ensured by tool
3. Misalignment of surfaces A, B, Г, Д relative to its thread Б not to exceed 0.05 mm (max tolerance)
4. Coating : Anodic oxidation, cromium.
5. Use Black paint ФА - 59, TY 6 - 10 - 1043 - 79 or black ЭП51 GOST 9640 - 75 to apply QCD stamp.
6. For the rest of technical requirements refer to OST B84 - 186 - 70
7. A 0.2 mm (max) deep mark on surface A and 0.2 mm (MAX) high shoulder on surface E are permitted.

MATERIAL	SPECIFICATION Nº	APPROVED/ ALTERNATIVE INDIGENOUS EQUIVALENTS.
ALUMINIUM BAR	i) GOST 21488-76	IS 733 GRADE 24345 IN 'WP' CONDITION OR BS 1474 GRADE 2014-A IN F6 CONDITION.

PROTECTIVE TREATMENT : ANODISING TO SPECIFICATION DEF151.

4-26941 3Д6

007

ADAPTER BUSH

ROD Д16 T KP 80 H
GOST 21488 - 76

SCALE :- 2:1 | EST. MASS :- 0·2 Kg.

APPD. FOR CQA(A)

AHSP :- CQA(A) KIRKEE

R NO	DATE	AUTHORITY	REVISION	ZONE	AHSP SIG.	D.O. SIG.
	20-12-94	D.C. 35878-A.	NEW DETAILS RE. MATERIAL AND PROTECTIVE TREATMENT INCORPORATED.			
	17-11-87	DC 34269-A	SCALE & EST. MASS ADDED.			
	4-6-85	DC.I.33760-A	DRG. SEALED PROV.			